ST7781

262K Color Single –Chip TFT Controller/Driver

1. Introduction

The ST7781 is a single-chip controller/driver for 262K-color, graphic type TFT-LCD. It consists of 720 source line and 320 gate line driving circuits. This chip is capable of connecting directly to an external microprocessor, and accepts, 8-bits/9-bits/16-bits/18-bits parallel interface. Display data can be stored in the on-chip display data RAM of 240x320x18 bits. It can perform display data RAM read/write operation with no external operation clock to minimize power consumption. In addition, because of the integrated power supply circuit necessary to drive liquid crystal; it is possible to make a display system with the fewest components.

2. Features

- Driver Output:
  - 720ch Source Outputs (240 X RGB)
  - 320ch Gate Outputs
  - Common Electrode Output
- Single Chip Display RAM:
  - Capacity: 240x320x18 bit
- Support Display Color
  - 65K Color
  - 262K Color
  - 8-color (Idle Mode)
- Supported LC Type Option
  - MVA LC Type
  - Transflective LC Type
  - Transmissive LC Type
- Supported MCU Interface
  - 8/9/16/18-bit Interface with 8080-Series MCU
  - 3-line serial interface
- Display Features
  - Partial Display Mode
  - Resizing Function (x1/2, x1/4)
- Build-in Circuit
  - DC/DC Converter
  - Adjustable VCOM Generation
  - Oscillator for Display Clock Generation
  - Timing Controller
  - Non-volatile Memory for Factory Default Value
  - Line Inversion, Frame Inversion
- Non-Volatile Memory
  - 7-bits for ID Code
  - 5-bits for VCOM Adjustment
- Supply Voltage Range
  - Analog Supply Voltage (VDD) Range: 2.5V to 3.3V
  - I/O Supply Voltage (VDDI) Range: 1.65V to 3.3V
- Output Voltage Level
  - GVDD – AGND: 3V to (AVDD-0.5) V
  - AVDD – AGND: 4.5V to 5.6V
  - VCL – AGND: -2.0V to -3.0V
  - VCOMH – AGND: 3.0V to (AVDD-0.5) V
  - VCOML – AGND: (VCL+0.5) V to 0.0V
  - VGH – AGND: 10V to 16.5V
  - VGL – AGND: -5V to -14V
- Lower Power Consumption
  - CMOS Compatible Inputs
  - Optimized Layout for COG Assembly
  - Operate Temperature Range: -30 ℃ ~ +85℃

ST7781	**8080 Parallel Interface :8bit/ 9 bit/16 bit /18bit** **Serial Interface :3- line**	ST

Sitronix Technology Corp. reserves the right to change the contents in this document without prior notice.

3. Pad Arrangement

Chip Size: 18163um x 800um

Chip Thickness : 280um or 300um (typ.)

Pad Location: Pad Center.

Coordinate Origin: Chip Center

Au Bump Height: 15um (typ.)

Au Bump Size:

1. 16um x 90um
Gate: G1 ~ G320
Source: S1 ~ S720

2. 50um x 80um
Input Pads
Pad 1 to 243.

Alignment Marks

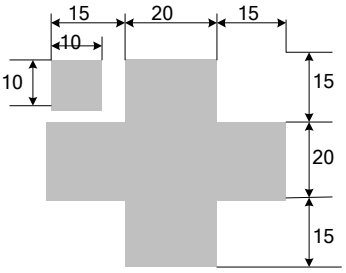

Alignment Mark: A1 (X , Y) = (-8751 , 252.5)

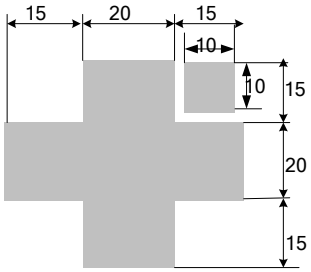

Alignment Mark: A2 (X , Y) = (8751 , 252.5)

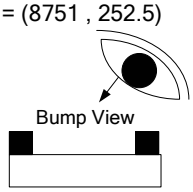

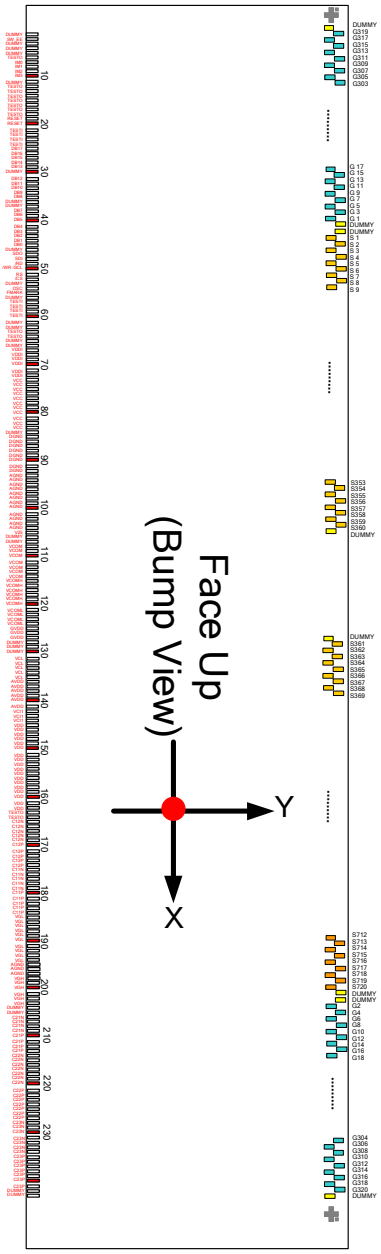

S1~S720 G1~G320 DUMMY (No.244~1291)	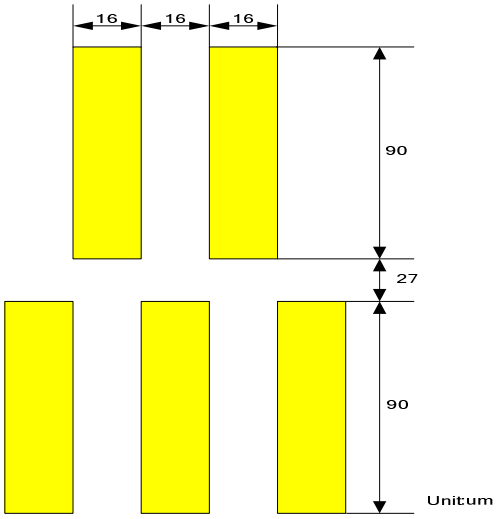
I/O Pads (No.1~243)	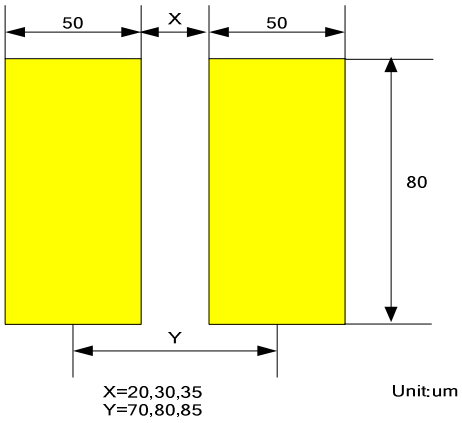

4. Pad Center Coordinates

PAD No.	PIN Name	X	Y
1	DUMMY	-8610	-304
2	SW_EE	-8540	-304
3	DUMMY	-8470	-304
4	DUMMY	-8400	-304
5	DUMMY	-8330	-304
6	TESTO	-8260	-304
7	IM0	-8190	-304
8	IM1	-8120	-304
9	IM2	-8050	-304
10	IM3	-7980	-304
11	DUMMY	-7910	-304
12	TESTO	-7840	-304
13	TESTO	-7770	-304
14	TESTO	-7700	-304
15	TESTO	-7630	-304
16	TESTO	-7560	-304
17	TESTO	-7490	-304
18	TESTO	-7420	-304
19	RESET	-7350	-304
20	RESET	-7280	-304
21	TESTI	-7210	-304
22	TESTI	-7140	-304
23	TESTI	-7070	-304
24	TESTI	-7000	-304
25	DB17	-6905	-304
26	DB16	-6825	-304
27	DB15	-6745	-304
28	DB14	-6665	-304
29	DB13	-6585	-304
30	DUMMY	-6495	-304
31	DB12	-6405	-304
32	DB11	-6325	-304
33	DB10	-6245	-304
34	DB9	-6165	-304
35	DB8	-6085	-304
36	DUMMY	-5990	-304
37	DUMMY	-5920	-304
38	DB7	-5825	-304
39	DB6	-5745	-304
40	DB5	-5665	-304

PAD No.	PIN Name	X	Y
41	DB4	-5585	-304
42	DB3	-5505	-304
43	DB2	-5425	-304
44	DB1	-5345	-304
45	DB0	-5265	-304
46	DUMMY	-5180	-304
47	SDO	-5110	-304
48	SDI	-5040	-304
49	/RD	-4970	-304
50	/WR /SCL	-4900	-304
51	RS	-4830	-304
52	/CS	-4760	-304
53	DUMMY	-4690	-304
54	OSC	-4620	-304
55	FMARK	-4550	-304
56	DUMMY	-4480	-304
57	TESTI	-4410	-304
58	TESTI	-4340	-304
59	TESTI	-4270	-304
60	TESTI	-4200	-304
61	DUMMY	-4130	-304
62	DUMMY	-4060	-304
63	TESTO	-3990	-304
64	TESTO	-3920	-304
65	DUMMY	-3850	-304
66	DUMMY	-3780	-304
67	VDDI	-3710	-304
68	VDDI	-3640	-304
69	VDDI	-3570	-304
70	VDDI	-3500	-304
71	VDDI	-3430	-304
72	VDDI	-3360	-304
73	VCC	-3290	-304
74	VCC	-3220	-304
75	VCC	-3150	-304
76	VCC	-3080	-304
77	VCC	-3010	-304
78	VCC	-2940	-304
79	VCC	-2870	-304
80	VCC	-2800	-304

PAD No.	PIN Name	X	Y
81	VCC	-2730	-304
82	VCC	-2660	-304
83	VCC	-2590	-304
84	DUMMY	-2520	-304
85	DGND	-2450	-304
86	DGND	-2380	-304
87	DGND	-2310	-304
88	DGND	-2240	-304
89	DGND	-2170	-304
90	DGND	-2100	-304
91	DGND	-2030	-304
92	DGND	-1960	-304
93	AGND	-1890	-304
94	AGND	-1820	-304
95	AGND	-1750	-304
96	AGND	-1680	-304
97	AGND	-1610	-304
98	AGND	-1540	-304
99	AGND	-1470	-304
100	AGND	-1400	-304
101	AGND	-1330	-304
102	AGND	-1260	-304
103	AGND	-1190	-304
104	AGND	-1120	-304
105	V25	-1050	-304
106	DUMMY	-980	-304
107	DUMMY	-910	-304
108	VCOM	-840	-304
109	VCOM	-770	-304
110	VCOM	-700	-304
111	VCOM	-630	-304
112	VCOM	-560	-304
113	VCOM	-490	-304
114	VCOM	-420	-304
115	VCOMH	-350	-304
116	VCOMH	-280	-304
117	VCOMH	-210	-304
118	VCOMH	-140	-304
119	VCOMH	-70	-304
120	VCOMH	0	-304

PAD No.	PIN Name	X	Y
121	VCOML	70	-304
122	VCOML	140	-304
123	VCOML	210	-304
124	VCOML	280	-304
125	GVDD	350	-304
126	GVDD	420	-304
127	GVDD	490	-304
128	DUMMY	560	-304
129	DUMMY	630	-304
130	DUMMY	700	-304
131	VCL	770	-304
132	VCL	840	-304
133	VCL	910	-304
134	VCL	980	-304
135	VCL	1050	-304
136	AVDD	1120	-304
137	AVDD	1190	-304
138	AVDD	1260	-304
139	AVDD	1330	-304
140	AVDD	1400	-304
141	AVDD	1470	-304
142	VCI1	1540	-304
143	VCI1	1610	-304
144	VCI1	1680	-304
145	VDD	1750	-304
146	VDD	1820	-304
147	VDD	1890	-304
148	VDD	1960	-304
149	VDD	2030	-304
150	VDD	2100	-304
151	VDD	2170	-304
152	VDD	2240	-304
153	VDD	2310	-304
154	VDD	2380	-304
155	VDD	2450	-304
156	VDD	2520	-304
157	VDD	2590	-304
158	VDD	2660	-304
159	VDD	2730	-304
160	VDD	2800	-304

PAD No.	PIN Name	X	Y
161	VDD	2870	-304
162	VDD	2940	-304
163	TESTO	3010	-304
164	TESTO	3080	-304
165	C12N	3150	-304
166	C12N	3220	-304
167	C12N	3290	-304
168	C12N	3360	-304
169	C12N	3430	-304
170	C12P	3500	-304
171	C12P	3570	-304
172	C12P	3640	-304
173	C12P	3710	-304
174	C12P	3780	-304
175	C11N	3850	-304
176	C11N	3920	-304
177	C11N	3990	-304
178	C11N	4060	-304
179	C11N	4130	-304
180	C11P	4200	-304
181	C11P	4270	-304
182	C11P	4340	-304
183	C11P	4410	-304
184	C11P	4480	-304
185	VGL	4550	-304
186	VGL	4620	-304
187	VGL	4690	-304
188	VGL	4760	-304
189	VGL	4830	-304
190	VGL	4900	-304
191	VGL	4970	-304
192	VGL	5040	-304
193	VGL	5110	-304
194	VGL	5180	-304
195	AGND	5250	-304
196	AGND	5320	-304
197	AGND	5390	-304
198	VGH	5460	-304
199	VGH	5530	-304
200	VGH	5600	-304

PAD No.	PIN Name	X	Y
201	VGH	5670	-304
202	VGH	5740	-304
203	VGH	5810	-304
204	DUMMY	5880	-304
205	DUMMY	5950	-304
206	C21N	6020	-304
207	C21N	6090	-304
208	C21N	6160	-304
209	C21N	6230	-304
210	C21P	6300	-304
211	C21P	6370	-304
212	C21P	6440	-304
213	C21P	6510	-304
214	C22N	6580	-304
215	C22N	6650	-304
216	C22N	6720	-304
217	C22N	6790	-304
218	C22N	6860	-304
219	C22N	6930	-304
220	C22N	7000	-304
221	C22P	7070	-304
222	C22P	7140	-304
223	C22P	7210	-304
224	C22P	7280	-304
225	C22P	7350	-304
226	C22P	7420	-304
227	C22P	7490	-304
228	C23N	7560	-304
229	C23N	7630	-304
230	C23N	7700	-304
231	C23N	7770	-304
232	C23N	7840	-304
233	C23N	7910	-304
234	C23N	7980	-304
235	C23P	8050	-304
236	C23P	8120	-304
237	C23P	8190	-304
238	C23P	8260	-304
239	C23P	8330	-304
240	C23P	8400	-304

PAD No.	PIN Name	X	Y
241	C23P	8470	-304
242	DUMMY	8540	-304
243	DUMMY	8610	-304
244	DUMMY	8659	182
245	G320	8643	299
246	G318	8627	182
247	G316	8611	299
248	G314	8595	182
249	G312	8579	299
250	G310	8563	182
251	G308	8547	299
252	G306	8531	182
253	G304	8515	299
254	G302	8499	182
255	G300	8483	299
256	G298	8467	182
257	G296	8451	299
258	G294	8435	182
259	G292	8419	299
260	G290	8403	182
261	G288	8387	299
262	G286	8371	182
263	G284	8355	299
264	G282	8339	182
265	G280	8323	299
266	G278	8307	182
267	G276	8291	299
268	G274	8275	182
269	G272	8259	299
270	G270	8243	182
271	G268	8227	299
272	G266	8211	182
273	G264	8195	299
274	G262	8179	182
275	G260	8163	299
276	G258	8147	182
277	G256	8131	299
278	G254	8115	182
279	G252	8099	299
280	G250	8083	182

PAD No.	PIN Name	X	Y
281	G248	8067	299
282	G246	8051	182
283	G244	8035	299
284	G244	8019	182
285	G240	8003	299
286	G240	7987	182
287	G236	7971	299
288	G234	7955	182
289	G232	7939	299
290	G230	7923	182
291	G228	7907	299
292	G226	7891	182
293	G224	7875	299
294	G222	7859	182
295	G220	7843	299
296	G218	7827	182
297	G216	7811	299
298	G214	7795	182
299	G212	7779	299
300	G210	7763	182
301	G208	7747	299
302	G206	7731	182
303	G204	7715	299
304	G202	7699	182
305	G200	7683	299
306	G198	7667	182
307	G196	7651	299
308	G194	7635	182
309	G192	7619	299
310	G190	7603	182
311	G188	7587	299
312	G186	7571	182
313	G184	7555	299
314	G182	7539	182
315	G180	7523	299
316	G178	7507	182
317	G176	7491	299
318	G174	7475	182
319	G172	7459	299
320	G170	7443	182

PAD No.	PIN Name	X	Y
321	G168	7427	299
322	G166	7411	182
323	G164	7395	299
324	G162	7379	182
325	G160	7363	299
326	G158	7347	182
327	G156	7331	299
328	G154	7315	182
329	G152	7299	299
330	G150	7283	182
331	G148	7267	299
332	G146	7251	182
333	G144	7235	299
334	G142	7219	182
335	G140	7203	299
336	G138	7187	182
337	G136	7171	299
338	G134	7155	182
339	G132	7139	299
340	G130	7123	182
341	G128	7107	299
342	G126	7091	182
343	G124	7075	299
344	G122	7059	182
345	G120	7043	299
346	G118	7027	182
347	G116	7011	299
348	G114	6995	182
349	G112	6979	299
350	G110	6963	182
351	G108	6947	299
352	G106	6931	182
353	G104	6915	299
354	G102	6899	182
355	G100	6883	299
356	G98	6867	182
357	G96	6851	299
358	G94	6835	182
359	G92	6819	299
360	G90	6803	182

PAD No.	PIN Name	X	Y
361	G88	6787	299
362	G86	6771	182
363	G84	6755	299
364	G82	6739	182
365	G80	6723	299
366	G78	6707	182
367	G76	6691	299
368	G74	6675	182
369	G72	6659	299
370	G70	6643	182
371	G68	6627	299
372	G66	6611	182
373	G64	6595	299
374	G62	6579	182
375	G60	6563	299
376	G58	6547	182
377	G56	6531	299
378	G54	6515	182
379	G52	6499	299
380	G50	6483	182
381	G48	6467	299
382	G46	6451	182
383	G44	6435	299
384	G42	6419	182
385	G40	6403	299
386	G38	6387	182
387	G36	6371	299
388	G34	6355	182
389	G32	6339	299
390	G30	6323	182
391	G28	6307	299
392	G26	6291	182
393	G24	6275	299
394	G22	6259	182
395	G20	6243	299
396	G18	6227	182
397	G16	6211	299
398	G14	6195	182
399	G12	6179	299
400	G10	6163	182

PAD No.	PIN Name	X	Y
401	G8	6147	299
402	G6	6131	182
403	G4	6115	299
404	G2	6099	182
405	DUMMY	6083	299
406	DUMMY	6047	299
407	S720	6031	182
408	S719	6015	299
409	S718	5999	182
410	S717	5983	299
411	S716	5967	182
412	S715	5951	299
413	S714	5935	182
414	S713	5919	299
415	S712	5903	182
416	S711	5887	299
417	S710	5871	182
418	S709	5855	299
419	S708	5839	182
420	S707	5823	299
421	S706	5807	182
422	S705	5791	299
423	S704	5775	182
424	S703	5759	299
425	S702	5743	182
426	S701	5727	299
427	S700	5711	182
428	S699	5695	299
429	S698	5679	182
430	S697	5663	299
431	S696	5647	182
432	S695	5631	299
433	S694	5615	182
434	S693	5599	299
435	S692	5583	182
436	S691	5567	299
437	S690	5551	182
438	S689	5535	299
439	S688	5519	182
440	S687	5503	299

PAD No.	PIN Name	X	Y
441	S686	5487	182
442	S685	5471	299
443	S684	5455	182
444	S683	5439	299
445	S682	5423	182
446	S681	5407	299
447	S680	5391	182
448	S679	5375	299
449	S678	5359	182
450	S677	5343	299
451	S676	5327	182
452	S675	5311	299
453	S674	5295	182
454	S673	5279	299
455	S672	5263	182
456	S671	5247	299
457	S670	5231	182
458	S669	5215	299
459	S668	5199	182
460	S667	5183	299
461	S666	5167	182
462	S665	5151	299
463	S664	5135	182
464	S663	5119	299
465	S662	5103	182
466	S661	5087	299
467	S660	5071	182
468	S659	5055	299
469	S658	5039	182
470	S657	5023	299
471	S656	5007	182
472	S655	4991	299
473	S654	4975	182
474	S653	4959	299
475	S652	4943	182
476	S651	4927	299
477	S650	4911	182
478	S649	4895	299
479	S648	4879	182
480	S647	4863	299

PAD No.	PIN Name	X	Y
481	S646	4847	182
482	S645	4831	299
483	S644	4815	182
484	S643	4799	299
485	S642	4783	182
486	S641	4767	299
487	S640	4751	182
488	S639	4735	299
489	S638	4719	182
490	S637	4703	299
491	S636	4687	182
492	S635	4671	299
493	S634	4655	182
494	S633	4639	299
495	S632	4623	182
496	S631	4607	299
497	S630	4591	182
498	S629	4575	299
499	S628	4559	182
500	S627	4543	299
501	S626	4527	182
502	S625	4511	299
503	S624	4495	182
504	S623	4479	299
505	S622	4463	182
506	S621	4447	299
507	S620	4431	182
508	S619	4415	299
509	S618	4399	182
510	S617	4383	299
511	S616	4367	182
512	S615	4351	299
513	S614	4335	182
514	S613	4319	299
515	S612	4303	182
516	S611	4287	299
517	S610	4271	182
518	S609	4255	299
519	S608	4239	182
520	S607	4223	299

PAD No.	PIN Name	X	Y
521	S606	4207	182
522	S605	4191	299
523	S604	4175	182
524	S603	4159	299
525	S602	4143	182
526	S601	4127	299
527	S600	4111	182
528	S599	4095	299
529	S598	4079	182
530	S597	4063	299
531	S596	4047	182
532	S595	4031	299
533	S594	4015	182
534	S593	3999	299
535	S592	3983	182
536	S591	3967	299
537	S590	3951	182
538	S589	3935	299
539	S588	3919	182
540	S587	3903	299
541	S586	3887	182
542	S585	3871	299
543	S584	3855	182
544	S583	3839	299
545	S582	3823	182
546	S581	3807	299
547	S580	3791	182
548	S579	3775	299
549	S578	3759	182
550	S577	3743	299
551	S576	3727	182
552	S575	3711	299
553	S574	3695	182
554	S573	3679	299
555	S572	3663	182
556	S571	3647	299
557	S570	3631	182
558	S569	3615	299
559	S568	3599	182
560	S567	3583	299

PAD No.	PIN Name	X	Y
561	S566	3567	182
562	S565	3551	299
563	S564	3535	182
564	S563	3519	299
565	S562	3503	182
566	S561	3487	299
567	S560	3471	182
568	S559	3455	299
569	S558	3439	182
570	S557	3423	299
571	S556	3407	182
572	S555	3391	299
573	S554	3375	182
574	S553	3359	299
575	S552	3343	182
576	S551	3327	299
577	S550	3311	182
578	S549	3295	299
579	S548	3279	182
580	S547	3263	299
581	S546	3247	182
582	S545	3231	299
583	S544	3215	182
584	S543	3199	299
585	S542	3183	182
586	S541	3167	299
587	S540	3151	182
588	S539	3135	299
589	S538	3119	182
590	S537	3103	299
591	S536	3087	182
592	S535	3071	299
593	S534	3055	182
594	S533	3039	299
595	S532	3023	182
596	S531	3007	299
597	S530	2991	182
598	S529	2975	299
599	S528	2959	182
600	S527	2943	299

PAD No.	PIN Name	X	Y
601	S526	2927	182
602	S525	2911	299
603	S524	2895	182
604	S523	2879	299
605	S522	2863	182
606	S521	2847	299
607	S520	2831	182
608	S519	2815	299
609	S518	2799	182
610	S517	2783	299
611	S516	2767	182
612	S515	2751	299
613	S514	2735	182
614	S513	2719	299
615	S512	2703	182
616	S511	2687	299
617	S510	2671	182
618	S509	2655	299
619	S508	2639	182
620	S507	2623	299
621	S506	2607	182
622	S505	2591	299
623	S504	2575	182
624	S503	2559	299
625	S502	2543	182
626	S501	2527	299
627	S500	2511	182
628	S499	2495	299
629	S498	2479	182
630	S497	2463	299
631	S496	2447	182
632	S495	2431	299
633	S494	2415	182
634	S493	2399	299
635	S492	2383	182
636	S491	2367	299
637	S490	2351	182
638	S489	2335	299
639	S488	2319	182
640	S487	2303	299

PAD No.	PIN Name	X	Y
641	S486	2287	182
642	S485	2271	299
643	S484	2255	182
644	S483	2239	299
645	S482	2223	182
646	S481	2207	299
647	S480	2191	182
648	S479	2175	299
649	S478	2159	182
650	S477	2143	299
651	S476	2127	182
652	S475	2111	299
653	S474	2095	182
654	S473	2079	299
655	S472	2063	182
656	S471	2047	299
657	S470	2031	182
658	S469	2015	299
659	S468	1999	182
660	S467	1983	299
661	S466	1967	182
662	S465	1951	299
663	S464	1935	182
664	S463	1919	299
665	S462	1903	182
666	S461	1887	299
667	S460	1871	182
668	S459	1855	299
669	S458	1839	182
670	S457	1823	299
671	S456	1807	182
672	S455	1791	299
673	S454	1775	182
674	S453	1759	299
675	S452	1743	182
676	S451	1727	299
677	S450	1711	182
678	S449	1695	299
679	S448	1679	182
680	S447	1663	299

PAD No.	PIN Name	X	Y
681	S446	1647	182
682	S445	1631	299
683	S444	1615	182
684	S443	1599	299
685	S442	1583	182
686	S441	1567	299
687	S440	1551	182
688	S439	1535	299
689	S438	1519	182
690	S437	1503	299
691	S436	1487	182
692	S435	1471	299
693	S434	1455	182
694	S433	1439	299
695	S432	1423	182
696	S431	1407	299
697	S430	1391	182
698	S429	1375	299
699	S428	1359	182
700	S427	1343	299
701	S426	1327	182
702	S425	1311	299
703	S424	1295	182
704	S423	1279	299
705	S422	1263	182
706	S421	1247	299
707	S420	1231	182
708	S419	1215	299
709	S418	1199	182
710	S417	1183	299
711	S416	1167	182
712	S415	1151	299
713	S414	1135	182
714	S413	1119	299
715	S412	1103	182
716	S411	1087	299
717	S410	1071	182
718	S409	1055	299
719	S408	1039	182
720	S407	1023	299

PAD No.	PIN Name	X	Y
721	S406	1007	182
722	S405	991	299
723	S404	975	182
724	S403	959	299
725	S402	943	182
726	S401	927	299
727	S400	911	182
728	S399	895	299
729	S398	879	182
730	S397	863	299
731	S396	847	182
732	S395	831	299
733	S394	815	182
734	S393	799	299
735	S392	783	182
736	S391	767	299
737	S390	751	182
738	S389	735	299
739	S388	719	182
740	S387	703	299
741	S386	687	182
742	S385	671	299
743	S384	655	182
744	S383	639	299
745	S382	623	182
746	S381	607	299
747	S380	591	182
748	S379	575	299
749	S378	559	182
750	S377	543	299
751	S376	527	182
752	S375	511	299
753	S374	495	182
754	S373	479	299
755	S372	463	182
756	S371	447	299
757	S370	431	182
758	S369	415	299
759	S368	399	182
760	S367	383	299

PAD No.	PIN Name	X	Y
761	S366	367	182
762	S365	351	299
763	S364	335	182
764	S363	319	299
765	S362	303	182
766	S361	287	299
767	DUMMY	271	182
768	DUMMY	-271	182
769	S360	-287	299
770	S359	-303	182
771	S358	-319	299
772	S357	-335	182
773	S356	-351	299
774	S355	-367	182
775	S354	-383	299
776	S353	-399	182
777	S352	-415	299
778	S351	-431	182
779	S350	-447	299
780	S349	-463	182
781	S348	-479	299
782	S347	-495	182
783	S346	-511	299
784	S345	-527	182
785	S344	-543	299
786	S343	-559	182
787	S342	-575	299
788	S341	-591	182
789	S340	-607	299
790	S339	-623	182
791	S338	-639	299
792	S337	-655	182
793	S336	-671	299
794	S335	-687	182
795	S334	-703	299
796	S333	-719	182
797	S332	-735	299
798	S331	-751	182
799	S330	-767	299
800	S329	-783	182

PAD No.	PIN Name	X	Y
801	S328	-799	299
802	S327	-815	182
803	S326	-831	299
804	S325	-847	182
805	S324	-863	299
806	S323	-879	182
807	S322	-895	299
808	S321	-911	182
809	S320	-927	299
810	S319	-943	182
811	S318	-959	299
812	S317	-975	182
813	S316	-991	299
814	S315	-1007	182
815	S314	-1023	299
816	S313	-1039	182
817	S312	-1055	299
818	S311	-1071	182
819	S310	-1087	299
820	S309	-1103	182
821	S308	-1119	299
822	S307	-1135	182
823	S306	-1151	299
824	S305	-1167	182
825	S304	-1183	299
826	S303	-1199	182
827	S302	-1215	299
828	S301	-1231	182
829	S300	-1247	299
830	S299	-1263	182
831	S298	-1279	299
832	S297	-1295	182
833	S296	-1311	299
834	S295	-1327	182
835	S294	-1343	299
836	S293	-1359	182
837	S292	-1375	299
838	S291	-1391	182
839	S290	-1407	299
840	S289	-1423	182

PAD No.	PIN Name	X	Y
841	S288	-1439	299
842	S287	-1455	182
843	S286	-1471	299
844	S285	-1487	182
845	S284	-1503	299
846	S283	-1519	182
847	S282	-1535	299
848	S281	-1551	182
849	S280	-1567	299
850	S279	-1583	182
851	S278	-1599	299
852	S277	-1615	182
853	S276	-1631	299
854	S275	-1647	182
855	S274	-1663	299
856	S273	-1679	182
857	S272	-1695	299
858	S271	-1711	182
859	S270	-1727	299
860	S269	-1743	182
861	S268	-1759	299
862	S267	-1775	182
863	S266	-1791	299
864	S265	-1807	182
865	S264	-1823	299
866	S263	-1839	182
867	S262	-1855	299
868	S261	-1871	182
869	S260	-1887	299
870	S269	-1903	182
871	S268	-1919	299
872	S267	-1935	182
873	S266	-1951	299
874	S265	-1967	182
875	S264	-1983	299
876	S263	-1999	182
877	S262	-2015	299
878	S261	-2031	182
879	S260	-2047	299
880	S249	-2063	182

PAD No.	PIN Name	X	Y
881	S248	-2079	299
882	S247	-2095	182
883	S246	-2111	299
884	S245	-2127	182
885	S244	-2143	299
886	S243	-2159	182
887	S242	-2175	299
888	S241	-2191	182
889	S240	-2207	299
890	S239	-2223	182
891	S238	-2239	299
892	S237	-2255	182
893	S236	-2271	299
894	S235	-2287	182
895	S234	-2303	299
896	S233	-2319	182
897	S232	-2335	299
898	S231	-2351	182
899	S230	-2367	299
900	S229	-2383	182
901	S228	-2399	299
902	S227	-2415	182
903	S226	-2431	299
904	S225	-2447	182
905	S224	-2463	299
906	S223	-2479	182
907	S222	-2495	299
908	S221	-2511	182
909	S220	-2527	299
910	S219	-2543	182
911	S218	-2559	299
912	S217	-2575	182
913	S216	-2591	299
914	S215	-2607	182
915	S214	-2623	299
916	S213	-2639	182
917	S212	-2655	299
918	S211	-2671	182
919	S210	-2687	299
920	S209	-2703	182

PAD No.	PIN Name	X	Y
921	S208	-2719	299
922	S207	-2735	182
923	S206	-2751	299
924	S205	-2767	182
925	S204	-2783	299
926	S203	-2799	182
927	S202	-2815	299
928	S201	-2831	182
929	S200	-2847	299
930	S199	-2863	182
931	S198	-2879	299
932	S197	-2895	182
933	S196	-2911	299
934	S195	-2927	182
935	S194	-2943	299
936	S193	-2959	182
937	S192	-2975	299
938	S191	-2991	182
939	S190	-3007	299
940	S189	-3023	182
941	S188	-3039	299
942	S187	-3055	182
943	S186	-3071	299
944	S185	-3087	182
945	S184	-3103	299
946	S183	-3119	182
947	S182	-3135	299
948	S181	-3151	182
949	S180	-3167	299
950	S179	-3183	182
951	S178	-3199	299
952	S177	-3215	182
953	S176	-3231	299
954	S175	-3247	182
955	S174	-3263	299
956	S173	-3279	182
957	S172	-3295	299
958	S171	-3311	182
959	S170	-3327	299
960	S169	-3343	182

PAD No.	PIN Name	X	Y
961	S168	-3359	299
962	S167	-3375	182
963	S166	-3391	299
964	S165	-3407	182
965	S164	-3423	299
966	S163	-3439	182
967	S162	-3455	299
968	S161	-3471	182
969	S160	-3487	299
970	S159	-3503	182
971	S158	-3519	299
972	S157	-3535	182
973	S156	-3551	299
974	S155	-3567	182
975	S154	-3583	299
976	S153	-3599	182
977	S152	-3615	299
978	S151	-3631	182
979	S150	-3647	299
980	S149	-3663	182
981	S148	-3679	299
982	S147	-3695	182
983	S146	-3711	299
984	S145	-3727	182
985	S144	-3743	299
986	S143	-3759	182
987	S142	-3775	299
988	S141	-3791	182
989	S140	-3807	299
990	S139	-3823	182
991	S138	-3839	299
992	S137	-3855	182
993	S136	-3871	299
994	S135	-3887	182
995	S134	-3903	299
996	S133	-3919	182
997	S132	-3935	299
998	S131	-3951	182
999	S130	-3967	299
1000	S129	-3983	182

PAD No.	PIN Name	X	Y
1001	S128	-3999	299
1002	S127	-4015	182
1003	S126	-4031	299
1004	S125	-4047	182
1005	S124	-4063	299
1006	S123	-4079	182
1007	S122	-4095	299
1008	S121	-4111	182
1009	S120	-4127	299
1010	S119	-4143	182
1011	S118	-4159	299
1012	S117	-4175	182
1013	S116	-4191	299
1014	S115	-4207	182
1015	S114	-4223	299
1016	S113	-4239	182
1017	S112	-4255	299
1018	S111	-4271	182
1019	S110	-4287	299
1020	S109	-4303	182
1021	S108	-4319	299
1022	S107	-4335	182
1023	S106	-4351	299
1024	S105	-4367	182
1025	S104	-4383	299
1026	S103	-4399	182
1027	S102	-4415	299
1028	S101	-4431	182
1029	S100	-4447	299
1030	S99	-4463	182
1031	S98	-4479	299
1032	S97	-4495	182
1033	S96	-4511	299
1034	S95	-4527	182
1035	S94	-4543	299
1036	S93	-4559	182
1037	S92	-4575	299
1038	S91	-4591	182
1039	S90	-4607	299
1040	S89	-4623	182

PAD No.	PIN Name	X	Y
1041	S88	-4639	299
1042	S87	-4655	182
1043	S86	-4671	299
1044	S85	-4687	182
1045	S84	-4703	299
1046	S83	-4719	182
1047	S82	-4735	299
1048	S81	-4751	182
1049	S80	-4767	299
1050	S79	-4783	182
1051	S78	-4799	299
1052	S77	-4815	182
1053	S76	-4831	299
1054	S75	-4847	182
1055	S74	-4863	299
1056	S73	-4879	182
1057	S72	-4895	299
1058	S71	-4911	182
1059	S70	-4927	299
1060	S69	-4943	182
1061	S68	-4959	299
1062	S67	-4975	182
1063	S66	-4991	299
1064	S65	-5007	182
1065	S64	-5023	299
1066	S63	-5039	182
1067	S62	-5055	299
1068	S61	-5071	182
1069	S60	-5087	299
1070	S59	-5103	182
1071	S58	-5119	299
1072	S57	-5135	182
1073	S56	-5151	299
1074	S55	-5167	182
1075	S54	-5183	299
1076	S53	-5199	182
1077	S52	-5215	299
1078	S51	-5231	182
1079	S50	-5247	299
1080	S49	-5263	182

PAD No.	PIN Name	X	Y
1081	S48	-5279	299
1082	S47	-5295	182
1083	S46	-5311	299
1084	S45	-5327	182
1085	S44	-5343	299
1086	S43	-5359	182
1087	S42	-5375	299
1088	S41	-5391	182
1089	S40	-5407	299
1090	S39	-5423	182
1091	S38	-5439	299
1092	S37	-5455	182
1093	S36	-5471	299
1094	S35	-5487	182
1095	S34	-5503	299
1096	S33	-5519	182
1097	S32	-5535	299
1098	S31	-5551	182
1099	S30	-5567	299
1100	S29	-5583	182
1101	S28	-5599	299
1102	S27	-5615	182
1103	S26	-5631	299
1104	S25	-5647	182
1105	S24	-5663	299
1106	S23	-5679	182
1107	S22	-5695	299
1108	S21	-5711	182
1109	S20	-5727	299
1110	S19	-5743	182
1111	S18	-5759	299
1112	S17	-5775	182
1113	S16	-5791	299
1114	S15	-5807	182
1115	S14	-5823	299
1116	S13	-5839	182
1117	S12	-5855	299
1118	S11	-5871	182
1119	S10	-5887	299
1120	S9	-5903	182

PAD No.	PIN Name	X	Y
1121	S8	-5919	299
1122	S7	-5935	182
1123	S6	-5951	299
1124	S5	-5967	182
1125	S4	-5983	299
1126	S3	-5999	182
1127	S2	-6015	299
1128	S1	-6031	182
1129	DUMMY	-6047	299
1130	DUMMY	-6081.62	299
1131	G1	-6099	182
1132	G3	-6115	299
1133	G5	-6131	182
1134	G7	-6147	299
1135	G9	-6163	182
1136	G11	-6179	299
1137	G13	-6195	182
1138	G15	-6211	299
1139	G17	-6227	182
1140	G19	-6243	299
1141	G21	-6259	182
1142	G23	-6275	299
1143	G25	-6291	182
1144	G27	-6307	299
1145	G29	-6323	182
1146	G31	-6339	299
1147	G33	-6355	182
1148	G35	-6371	299
1149	G37	-6387	182
1150	G39	-6403	299
1151	G41	-6419	182
1152	G43	-6435	299
1153	G45	-6451	182
1154	G47	-6467	299
1155	G49	-6483	182
1156	G51	-6499	299
1157	G53	-6515	182
1158	G55	-6531	299
1159	G57	-6547	182
1160	G59	-6563	299

PAD No.	PIN Name	X	Y
1161	G61	-6579	182
1162	G63	-6595	299
1163	G65	-6611	182
1164	G67	-6627	299
1165	G69	-6643	182
1166	G71	-6659	299
1167	G73	-6675	182
1168	G75	-6691	299
1169	G77	-6707	182
1170	G79	-6723	299
1171	G81	-6739	182
1172	G83	-6755	299
1173	G85	-6771	182
1174	G87	-6787	299
1175	G89	-6803	182
1176	G91	-6819	299
1177	G93	-6835	182
1178	G95	-6851	299
1179	G97	-6867	182
1180	G99	-6883	299
1181	G101	-6899	182
1182	G103	-6915	299
1183	G105	-6931	182
1184	G107	-6947	299
1185	G109	-6963	182
1186	G111	-6979	299
1187	G113	-6995	182
1188	G115	-7011	299
1189	G117	-7027	182
1190	G119	-7043	299
1191	G121	-7059	182
1192	G123	-7075	299
1193	G125	-7091	182
1194	G127	-7107	299
1195	G129	-7123	182
1196	G131	-7139	299
1197	G133	-7155	182
1198	G135	-7171	299
1199	G137	-7187	182
1200	G139	-7203	299

PAD No.	PIN Name	X	Y
1201	G141	-7219	182
1202	G143	-7235	299
1203	G145	-7251	182
1204	G147	-7267	299
1205	G149	-7283	182
1206	G151	-7299	299
1207	G153	-7315	182
1208	G155	-7331	299
1209	G157	-7347	182
1210	G159	-7363	299
1211	G161	-7379	182
1212	G163	-7395	299
1213	G165	-7411	182
1214	G167	-7427	299
1215	G169	-7443	182
1216	G171	-7459	299
1217	G173	-7475	182
1218	G175	-7491	299
1219	G177	-7507	182
1220	G179	-7523	299
1221	G181	-7539	182
1222	G183	-7555	299
1223	G185	-7571	182
1224	G187	-7587	299
1225	G189	-7603	182
1226	G191	-7619	299
1227	G193	-7635	182
1228	G195	-7651	299
1229	G197	-7667	182
1230	G199	-7683	299
1231	G201	-7699	182
1232	G203	-7715	299
1233	G205	-7731	182
1234	G207	-7747	299
1235	G209	-7763	182
1236	G211	-7779	299
1237	G213	-7795	182
1238	G215	-7811	299
1239	G217	-7827	182
1240	G219	-7843	299

PAD No.	PIN Name	X	Y
1241	G221	-7859	182
1242	G223	-7875	299
1243	G225	-7891	182
1244	G227	-7907	299
1245	G229	-7923	182
1246	G231	-7939	299
1247	G233	-7955	182
1248	G235	-7971	299
1249	G237	-7987	182
1250	G239	-8003	299
1251	G241	-8019	182
1252	G243	-8035	299
1253	G245	-8051	182
1254	G247	-8067	299
1255	G249	-8083	182
1256	G251	-8099	299
1257	G253	-8115	182
1258	G255	-8131	299
1259	G257	-8147	182
1260	G259	-8163	299
1261	G261	-8179	182
1262	G263	-8195	299
1263	G265	-8211	182
1264	G267	-8227	299
1265	G269	-8243	182
1266	G271	-8259	299
1267	G273	-8275	182
1268	G275	-8291	299
1269	G277	-8307	182
1270	G279	-8323	299
1271	G281	-8339	182
1272	G283	-8355	299
1273	G285	-8371	182
1274	G287	-8387	299
1275	G289	-8403	182
1276	G291	-8419	299
1277	G293	-8435	182
1278	G295	-8451	299
1279	G297	-8467	182
1280	G299	-8483	299

PAD No.	PIN Name	X	Y
1281	G301	-8499	182
1282	G303	-8515	299
1283	G305	-8531	182
1284	G307	-8547	299
1285	G309	-8563	182
1286	G311	-8579	299
1287	G313	-8595	182
1288	G315	-8611	299
1289	G317	-8627	182
1290	G319	-8643	299
1291	DUMMY	-8659	182

5. Block Diagram

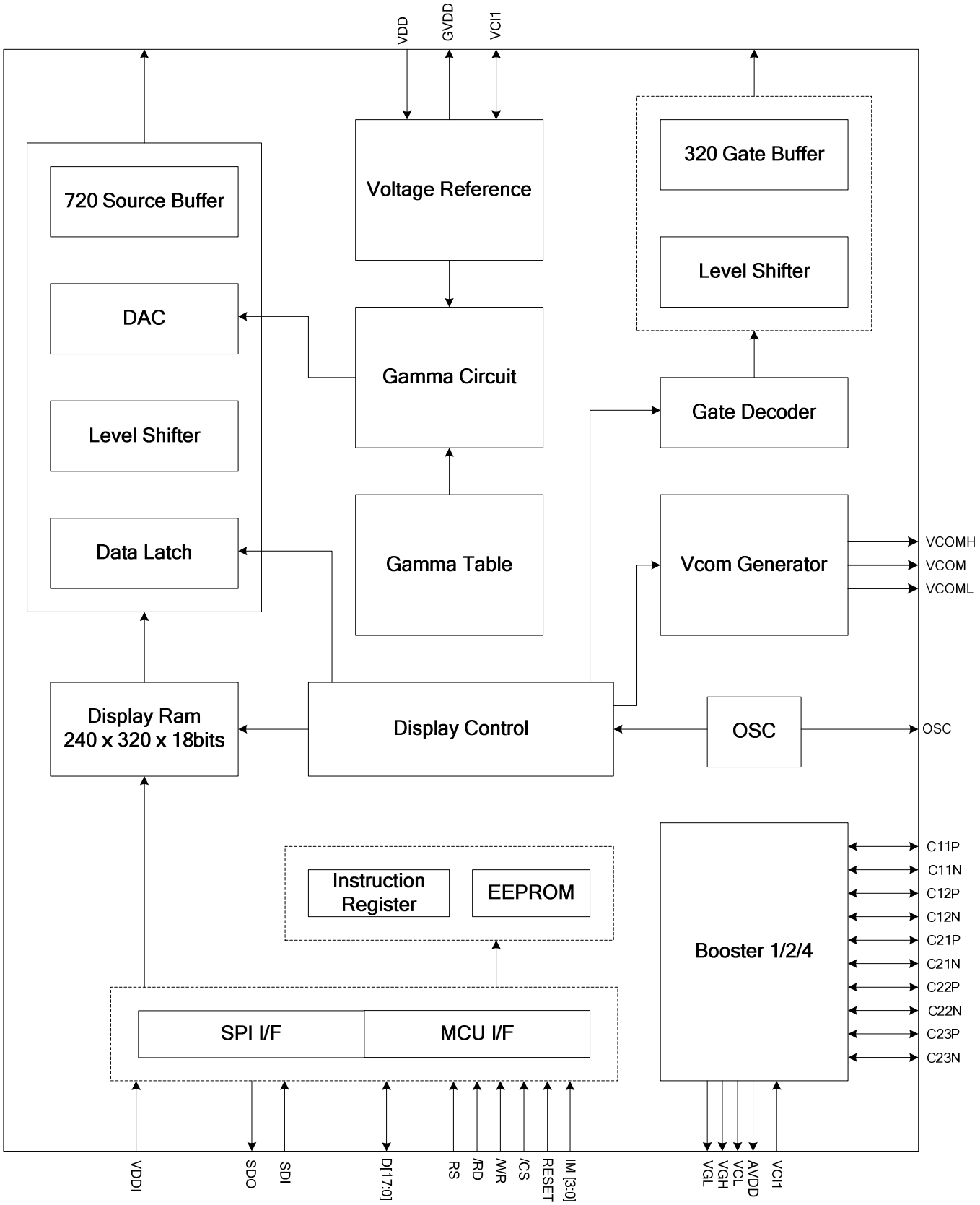

6. Pin Description

6.1 Power Supply Pin

Name	I/O	Description	Connect Pin
VDD	I	Power supply for analog, digital system and booster circuit	VDD
VDDI	I	Power supply for I/O system	VDDI
AGND	I	System ground for analog system and booster circuit.	GND
DGND	I	System ground for I/O system and internal digital system.	GND

6.2 Interface Logic Pin

<table>
<tr><th>Name</th><th>I/O</th><th>Description</th><th>Connect Pin</th></tr>
<tr><td>IM0~IM3</td><td>I</td><td>-Select the MCU system interface mode
<table>
<tr><th>IM3</th><th>IM2</th><th>IM1</th><th>IM0</th><th>MCU-Interface Mode</th><th>DB Pin Use</th></tr>
<tr><td>0</td><td>0</td><td>1</td><td>0</td><td>I80-system 16-bit interface</td><td>DB[17:10]
DB[8:1]</td></tr>
<tr><td>0</td><td>0</td><td>1</td><td>1</td><td>I80-system 8-bit interface</td><td>DB[17:10]</td></tr>
<tr><td>0</td><td>1</td><td>0</td><td>ID</td><td>Serial Peripheral interface (SPI)</td><td>SDI,SDO</td></tr>
<tr><td>1</td><td>0</td><td>1</td><td>0</td><td>I80-system 18-bit interface</td><td>DB[17:0]</td></tr>
<tr><td>1</td><td>0</td><td>1</td><td>1</td><td>I80-system 9-bit interface</td><td>DB[17:9]</td></tr>
</table>
-If not used, please connect this pin to VDDI or DGND
-When the serial peripheral interface is selected, IM0_ID pin is used for the device ID code setting.</td><td>DGND/VDDI</td></tr>
<tr><td>RESET</td><td>I</td><td>-This signal will reset the driver and it must be applied to properly initialize the chip.</td><td>MCU</td></tr>
<tr><td>/CS</td><td>I</td><td>-Chip select input pin and signal is active low.
-This pin can be permanently fixed “Low” in MCU interface mode only.</td><td>MCU</td></tr>
<tr><td>RS</td><td>I</td><td>-Display data or command selection pin in MCU interface.
RS =’1’: Display Data or Parameter.
RS =’0’: Command.</td><td>MCU</td></tr>
<tr><td>/RD</td><td>I</td><td>-Read enable in 8080 MCU parallel interface.</td><td>MCU</td></tr>
<tr><td>/WR/SCL</td><td>I</td><td>-Write operation enable pin in 8080 MCU parallel interface.
-In SPI interface, this pin is used as SCL.
-If not used, please connect this pin to VDDI or DGND.</td><td>MCU</td></tr>
<tr><td>SDI</td><td>I</td><td>-SPI interface data input pin.
-The data is latched on the rising edge of the SCL signal.
-If not used, please connect this pin to VDDI or DGND.</td><td>MCU</td></tr>
<tr><td>SDO</td><td>O</td><td>-SPI interface data output pin.
-The data is outputted on the falling edge of the SCL signal.
-Let SDO as floating when not in use.</td><td>MCU</td></tr>
<tr><td>SW_EE</td><td>I</td><td>-To use extended command set, please connect this pin to VDDI.
-During normal operation, please let this pin open.</td><td>DGND/VDDI</td></tr>
<tr><td>FMARK</td><td>O</td><td>-Output a frame head pulse signal is used as synchronies MCU to frame rate
-If not used, Let this pin open</td><td>-</td></tr>
</table>

Note1. When /CS=”1”, there is no influence to the parallel interface.
Note2. “1” = VDDI level, “0” = DGND level.

6.3 Driver Output Pin

Name	I/O	Description	Connect Pin
S1 to S720	O	-Source driver output pins -To change the shift direction of signal outputs, use the SS bit. SS = “0”, the data in the RAM address “h00000” is output from S1. SS = “1”, the data in the RAM address “h00000” is output from S720. -When SS=”0” S1, S4, S7, … display red (R), S2, S5, S8, ... display green (G), and S3, S6, S9 ... display blue (B)	LCD
G1 to G320	O	-Gate driver output pins. VGH: Selecting Gate Lines Level. VGL: Non-selecting Gate Lines Level.	LCD
VCI1	O	-A reference voltage for step-up circuit 1. The amplitude between VDD and AGND is determined by the VC [2:0] bits.Make sure to set the VCI1 voltage so that the AVDD, VCL, VGH and VGL voltages are set within the respective specification. -Connect a capacitor for stabilization.	Capacitor
AVDD	O	-Power pad for analogy circuit. -Connect a capacitor for stabilization.	Capacitor
VCL	O	-Power pad for VCOML circuit. -Connect a capacitor for stabilization.	Capacitor
VGH	O	-Power pad pin for gate driver circuit. -Connect a capacitor for stabilization.	Capacitor
VGL	O	-Power pad for gate driver circuit. -Connect a capacitor for stabilization.	Capacitor
GVDD	O	-A standard level for grayscale voltage generator. -Connect a capacitor for stabilization.	Capacitor
VCC	O	- Monitoring pin of internal digital reference voltage. -Connect a capacitor for stabilization.	Capacitor
VCOMH	O	-Positive voltage output of VCOM. -Connect a capacitor for stabilization.	Capacitor
VCOML	O	-Negative voltage output of VCOM. -Connect a capacitor for stabilization.	Capacitor
VCOM	O	-A power supply for the TFT-LCD common electrode.	Common Electrode
C11P, C11N C12P, C12N	O	-Capacitor connecting pins for step-up circuit 1 (for AVDD).	Step-Up Capacitor
C21P, C21N C22P, C22N C23P, C23N	O	-Capacitor connecting pins for step-up circuit 2 (for VGH, VGL, and VCL).	Step-Up Capacitor

Note1.VCI1, GVDD, AVDD, VCC, VCL, VOMH, VOML, C11P/N, C12P/N, C21P/N pin need to connect a capacitor that rated min voltage: 6.3v and typical capacitance value: 1uf
Note2.C22P/N, C23P /N, need to connect a Capacitor that rated min voltage: 10v and typical capacitance value: 1uf
Note3.VGH, VGL need to connect a Capacitor that rated min voltage: 25v and typical capacitance value: 1uf

6.4 Test Pin

Name	I/O	Description	Connect Pin
DUMMY	O	-These pins are dummy (have no function inside). -Please let these pin open.	Open
TESTO	O	-These pins are for testing. -Please let these pin open.	Open
TESTI	I	-These pins are for testing. -Please let these pin connect to DGND.	DGND
OSC	O	-This pin is for testing. -Please let these pin open.	Open
V25	O	-This pin is for testing. -Please let these pin open.	Open

7. Driver Electrical Characteristics

7.1 Absolute Operation Range

Item	Symbol	Rating	Unit
Supply Voltage	VDD	- 0.3 ~ +4.6	V
Supply Voltage (Logic)	VDDI	- 0.3 ~ +4.6	V
Supply Voltage (Digital)	VCC	-0.3 ~ +4.6	V
Driver Supply Voltage	VGH-VGL	-0.3 ~ +30.0	V
Logic Input Voltage Range	V_{IN}	-0.3 ~ VDDI + 0.5	V
Logic Output Voltage Range	V_O	-0.3 ~ VDDI + 0.5	V
Operating Temperature Range	T_{OPR}	-30 ~ +85	℃
Storage Temperature Range	T_{STG}	-40 ~ +125	℃

Note: If one of the above items is exceeded its maximum limitation momentarily, the quality of the product may be degraded. Absolute maximum limitation, therefore, specify the values exceeding which the product may be physically damaged. Be sure to use the product within the recommend range.

7.2 DC Characteristics

Parameter	Symbol	Condition	Specification			Unit	Related Pins
			Min	TYP	Max		
Power & Operation Voltage							
System Voltage	VDD	Operating Voltage	2.5	2.8	3.3	V	
Interface Operation Voltage	VDDI	I/O Supply Voltage	1.65	1.8/2.8	3.3	V	
Input / Output							
Logic-High Input Voltage	V_{IH}		0.7VDDI		VDDI	V	Note 1
Logic-Low Input Voltage	V_{IL}		VSS		0.3VDDI	V	Note 1
Logic-High Output Voltage	V_{OH}	I_{OH} = -1.0mA	0.8VDDI		VDDI	V	Note 1
Logic-Low Output Voltage	V_{OL}	I_{OL} = +1.0mA	VSS		0.2VDDI	V	Note 1
Input Leakage Current	I_{IL}		-0.1		+0.1	uA	Note 1
Source Driver							
Output Deviation Voltage	V_{DEV}		10			mV	
Output Offset Voltage	V_{OFFSET}				35	mV	Note 2

Note 1: VDDI=1.65 to 3.3V, VDD=2.6 to 3.3V, AGND=DGND=0V, TA= -30 to 85℃.
Note 2: The maximum value is between measured point of source output and gamma setting value.

7.3 Power Consumption

Ta=25℃, Frame Rate = 70Hz,

Operation Mode	Inversion Mode	Image	DC Current Consumption			
			Typical		Maximum	
			IDDI (mA)	IDD (mA)	IDDI (mA)	IDD (mA)
Normal Mode	One Line	Note 1	0.01	3.00	0.01	5.00
Stand-by Mode	N/A	Note 1	0.01	0.03	0.01	0.05

Note 1: VDDI=1.8V, VDD=2.8V, All pixels black.

.

8. System Interface

8.1 Interface Specifications

ST7781 has the system interface to read/write the control registers and display memory (DRAM) displaying a moving picture. User can select an optimum interface to display the moving or still picture with efficient data transfer. All display data are stored in the DRAM to reduce the data transfer efforts and only the updating data is necessary to be transferred. User can only update a sub-range of DRAM by using the window address function.

ST7781 adopts 18-bit bus interface architecture for high-performance microprocessor. All the functional blocks of ST7781 starts to work after receiving the correct instruction from the external microprocessor by the 18bits, 16bits, 9bits,8bits. The index register (IR) stores the register address to which the instructions and display data will be written. The data/command selection signal (RS), the read/write signals (/RD/WR) and data bus DB[17:0] are used to read/write the instructions and data of ST7781. The registers of the ST7781 are categorized into the following groups.

1. Specify the Index of Register (IR)
2. Read a Status
3. Display Control
4. Power Management Control
5. Display Data Processing
6. Set Internal DRAM Address (AC)
7. Transfer Data to/from the Internal DRAM (R22h)
8. Internal Grayscale γ-Correction (R30h ~ R3Dh)

Normally, the display data (DRAM) is most often updated, and in order since the ST7781 can update internal DRAM address automatically as it writes data to the internal DRAM and minimize data transfer by using the window address function, there are fewer loads on the program in the microprocessor.

8.2 Timing Chart

Parallel Interface Characteristics: 18, 16, 9 or 8-bits Bus (8080-Series MCU Interface)

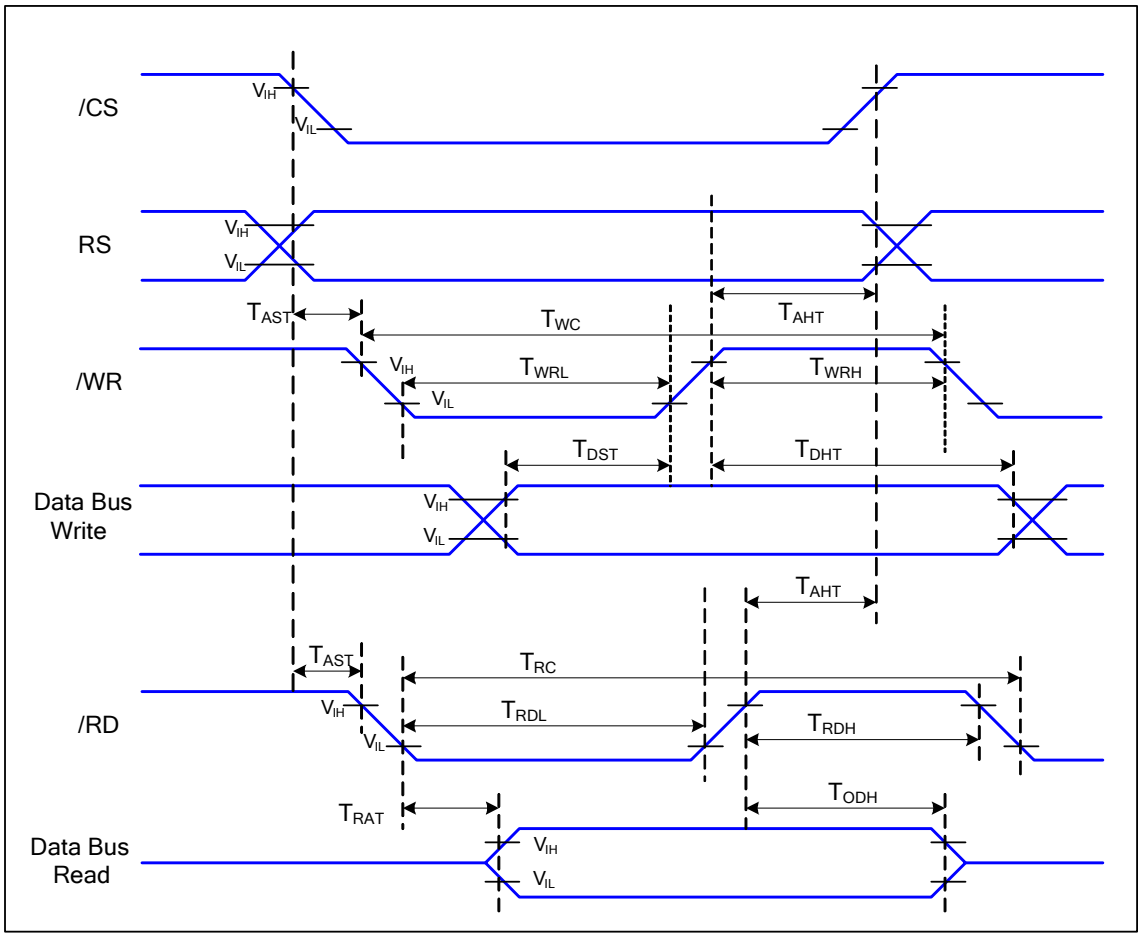

Fig. 8.2.1 Parallel Interface Timing Characteristics (8080-Series MCU Interface)

VDDI=1.65 to 3.3V, VDD=2.5 to 3.3V, AGND=DGND=0V, Ta=25 ℃

Signal	Symbol	Parameter	Min	Max	Unit	Description
RS	T_{AST}	Address Setup Time	10	-	ns	
	T_{AHT}	Address Hold Time (Write/Read)	5	-	ns	
/WR	T_{WC}	Write Cycle	100	-	ns	
	T_{WRH}	Control Pulse “H” Duration	50	-	ns	
	T_{WRL}	Control Pulse “L” Duration	50	-	ns	
/RD	T_{RC}	Read Cycle	300	-	ns	
	T_{RDH}	Control Pulse “H” Duration	150	-	ns	
	T_{RDL}	Control Pulse “L” Duration	150	-	ns	
DB[17:0]	T_{DST}	Data Setup Time	10	-	ns	T_{RAT}, T_{RATFM}: 3K ohm Pullup or Down and 30pF Parallel Cap. To GND. T_{ODH}: 3K ohm Pullup or Down.
	T_{DHT}	Data Hold Time	15	-	ns	
	T_{RAT}	Read Access Time	-	100	ns	
	T_{ODH}	Output Disable Time	50	-	ns	

Table 8.2.1: Parallel Interface Characteristics

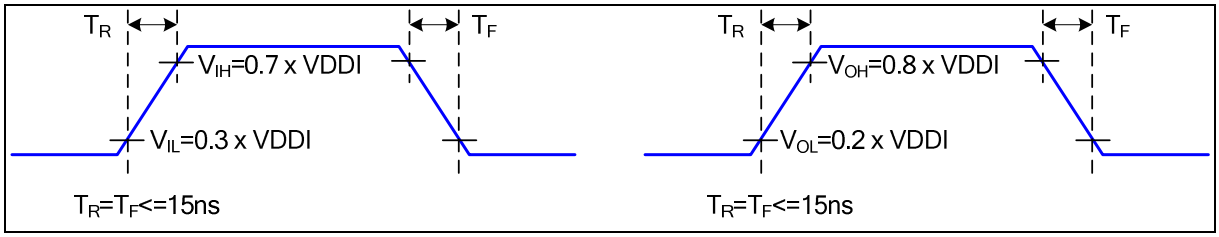

Fig. 8.2.2 Rising and Falling Timing for I/O Signal

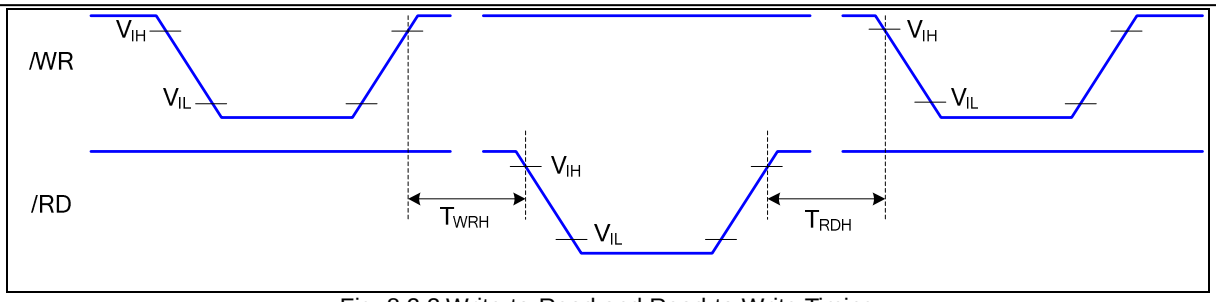

Fig. 8.2.3 Write-to-Read and Read-to-Write Timing

Note: The rising time and falling time (Tr, Tf) of input signal and fall time are specified at 15 ns or less. Logic high and low levels are specified as 30% and 70% of VDDI for Input signals.

Serial interface characteristics (3-line serial)

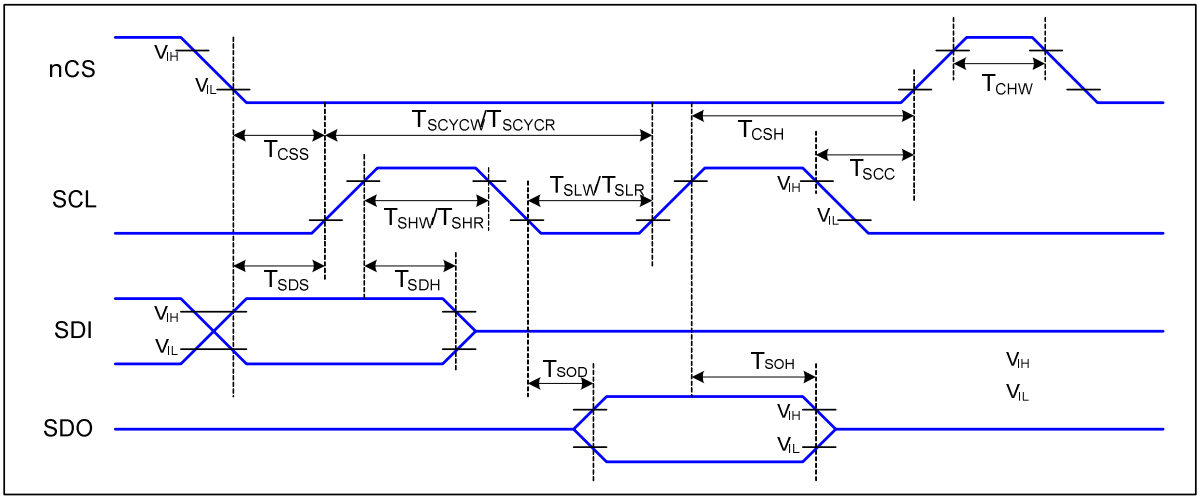

Fig. 8.2.4 3-line serial interface timing

VDDI=1.65 to 3.3V, VDD=2.5 to 3.3V, AGND=DGND=0V, Ta=25 ℃

Signal	Symbol	Parameter	Min	Max	Unit	Description
/CS	T_{CSS}	Chip select setup time	10		ns	
	T_{SCC}	Chip select hold time	50		ns	
SCL	T_{SCYCW}	Serial clock cycle (Write)	100		ns	
	T_{SHW}	SCL “H” pulse width (Write)	40		ns	
	T_{SLW}	SCL “L” pulse width (Write)	40		ns	
	T_{SCYCR}	Serial clock cycle (Read)	200		ns	
	T_{SHR}	SCL “H” pulse width (Read)	100		ns	
	T_{SLR}	SCL “L” pulse width (Read)	100		ns	
SDI	T_{SDS}	Data setup time	20		ns	
	T_{SDH}	Data hold time	20		ns	
SDO	T_{SOD}	Data output setup time	-	100	ns	
	T_{SOH}	Data output hold time	5	-	ns	

Table 8.2.2.: 3-line Serial Interface Characteristics

Note : The rising time and falling time (Tr, Tf) of input signal and fall time are specified at 15 ns or less. Logic high and low levels are specified as 30% and 70% of VDDI for Input signals.

9. 8080 - Series MCU Parallel Interface

9.1 General Description

The MCU can use on of following interfaces: 11-lines with 8-bit parallel interface, 12-lines with 9-bit parallel interface, 19-lines with 16-bit parallel interface or 21-lines with 18-bit parallel interface. The chip-select /CS (active low) enables/disables the parallel interface. RESET (active low) is an external reset signal to reset chip. /WR is the parallel data write, /RD is the parallel data read and DB[17:0] is parallel data.

The LCD driver reads the data at the rising edge of /WR signal.Input The RS is the data/command flag. When RS='1', DB [17:0] bits are either display data or command parameters. When RS ='0', DB [17:0] bits are commands.

ST7781 supports high-speed system interfaces: i80-system high-speed interfaces to 8-, 9-, 16-, 18-bit parallel ports. The interface mode is selected by setting the IM[3:0] pins.The interface functions of 8080-series parallel interface are given in following table.

IM3	IM2	IM1	IM0	Interface	RS	/RD	/WR	Read Back Selection
0	0	1	1	8-bit parallel	0	1	↑	Write Command (DB[17:10])
					1	1	↑	Write Display Data (DB[17:10])
					1	↑	1	Read Display Data (DB[17:10])
					1	↑	1	Read Parameter or Status (DB[17:10])
0	0	1	0	16-bit parallel	0	1	↑	Write Command (DB[17:10], DB[8:1])
					1	1	↑	Write Display Data (DB[17:10], DB[8:1])
					1	↑	1	Read Display Data (DB[17:10], DB[8:1])
					1	↑	1	Read Parameter or Status (DB[17:10], DB[8:1])
1	0	1	1	9-bit parallel	0	1	↑	Write Command (DB[17:10])
					1	1	↑	Write Display Data (DB[17:9])
					1	↑	1	Read Display Data (DB[17:9])
					1	↑	1	Read Parameter or Status (DB[17:10])
1	0	1	0	18-bit parallel	0	1	↑	Write Command (DB[17:10], DB[8:1])
					1	1	↑	Write Display Data (DB[17:0])
					1	↑	1	Read Display Data (DB[17:0])
					1	↑	1	Read Parameter or Status (DB[17:10], DB[8:1])

Table 9.1: 8080 Series MCU Paraell Interface

ST7781 has a 16-bit index register (IR), an 18-bit write-data register (WDR), and an 18-bit read-data register (RDR). The IR is the register to store index information from control registers and the internal DRAM. The WDR is the register to temporarily store data to be written to control registers and the internal DRAM. The RDR is the register to temporarily store data read from the DRAM. Data from the MPU to be written to the internal DRAM are first written to the WDR and then automatically written to the internal DRAM in internal operation. Data are read via the RDR from the internal DRAM. Therefore, invalid data are read out to the data bus when the ST7781 read the first data from the internal DRAM. Valid data are read out after the ST7781 performs the second read operation. Registers are written consecutively as the register execution time except starting oscillator takes 0 clock cycle.

9.2 8080-Series MCU Write Cycle Sequence

The write cycle means that the host writes information (command or/and data) to the display module via the interface. Each write cycle (/WR “1” - “0” - “1” sequence) consists of 3 control signals (RS, /RD, /WR) and data signals (DB17:0]). RS bit is a control signal, which tells if the data is a command or a data. The data signals are the command if the control signal is “0” and vice versa it is data “1”.

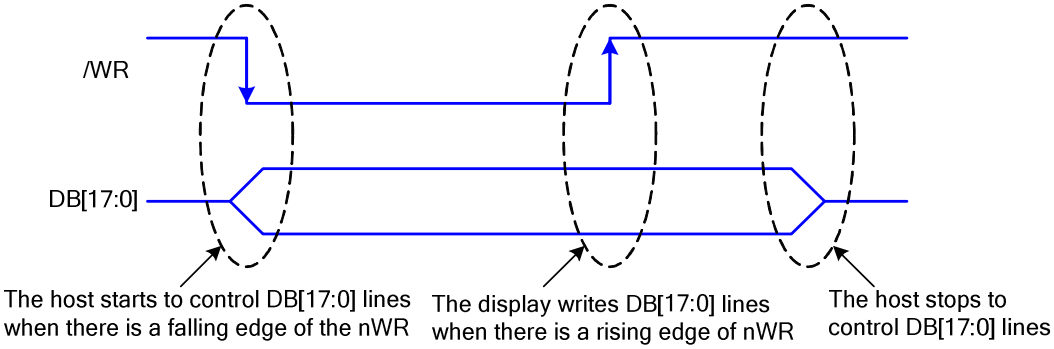

Fig. 9.2 8080-Series /WR Protocol

Note: /WR is an unsynchronized signal (It can be stopped).

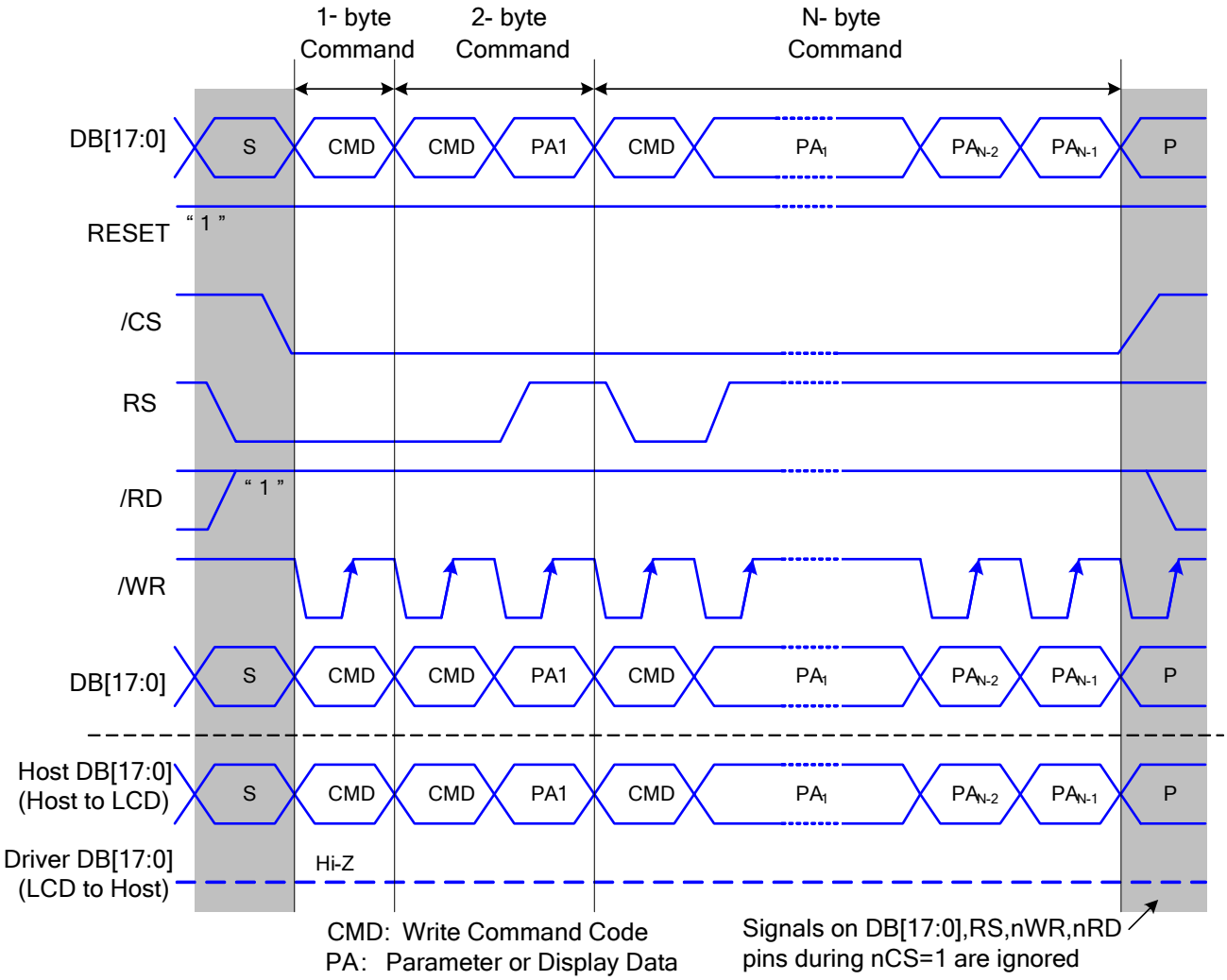

Fig. 9.2.1 8080-Series Parallel Bus Protocol, Write to Register or Display RAM

9.3 8080-18 bits Interface Write Data Format

The 8080-18bits interface is selected by setting the IM [3:0] ="1010".This mode only 262k colors format in display. In this interface write Instructions and DRAM method following figure.

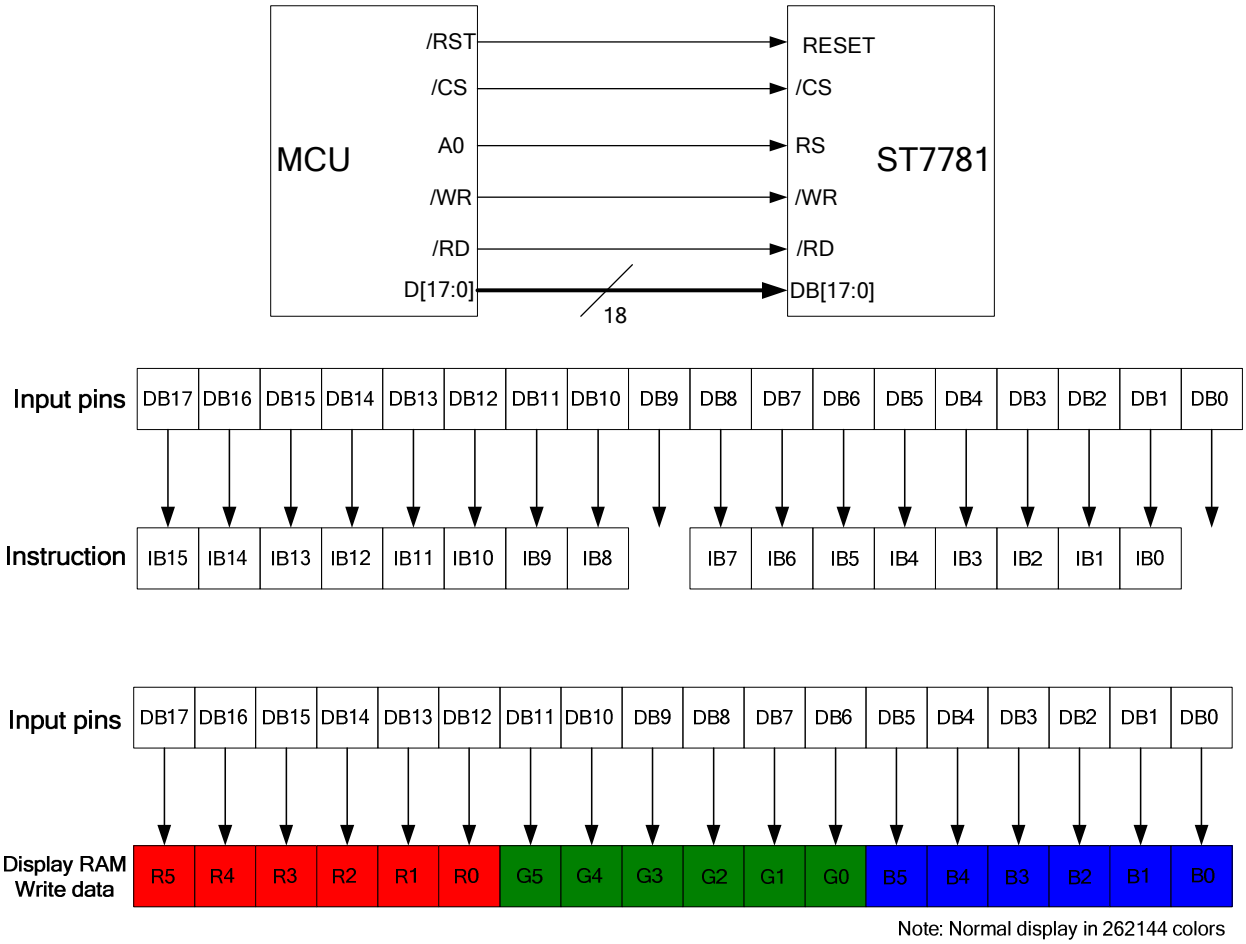

Fig. 9.1.2 8080-18 bits Interface Data Format (Command Write/DRAM Write)

9.4 8080-16 bits Interface Write Data Format

The 8080-16bits interface is selected by setting IM [3:0] =”0010”.The mode can display 262k or 65k colors format. When the 262k color format is display, two transfers mode is used (first transfer: 2 bits, second transfer: 16 bits or first transfer: 16 bits, second transfer: 2 bits)

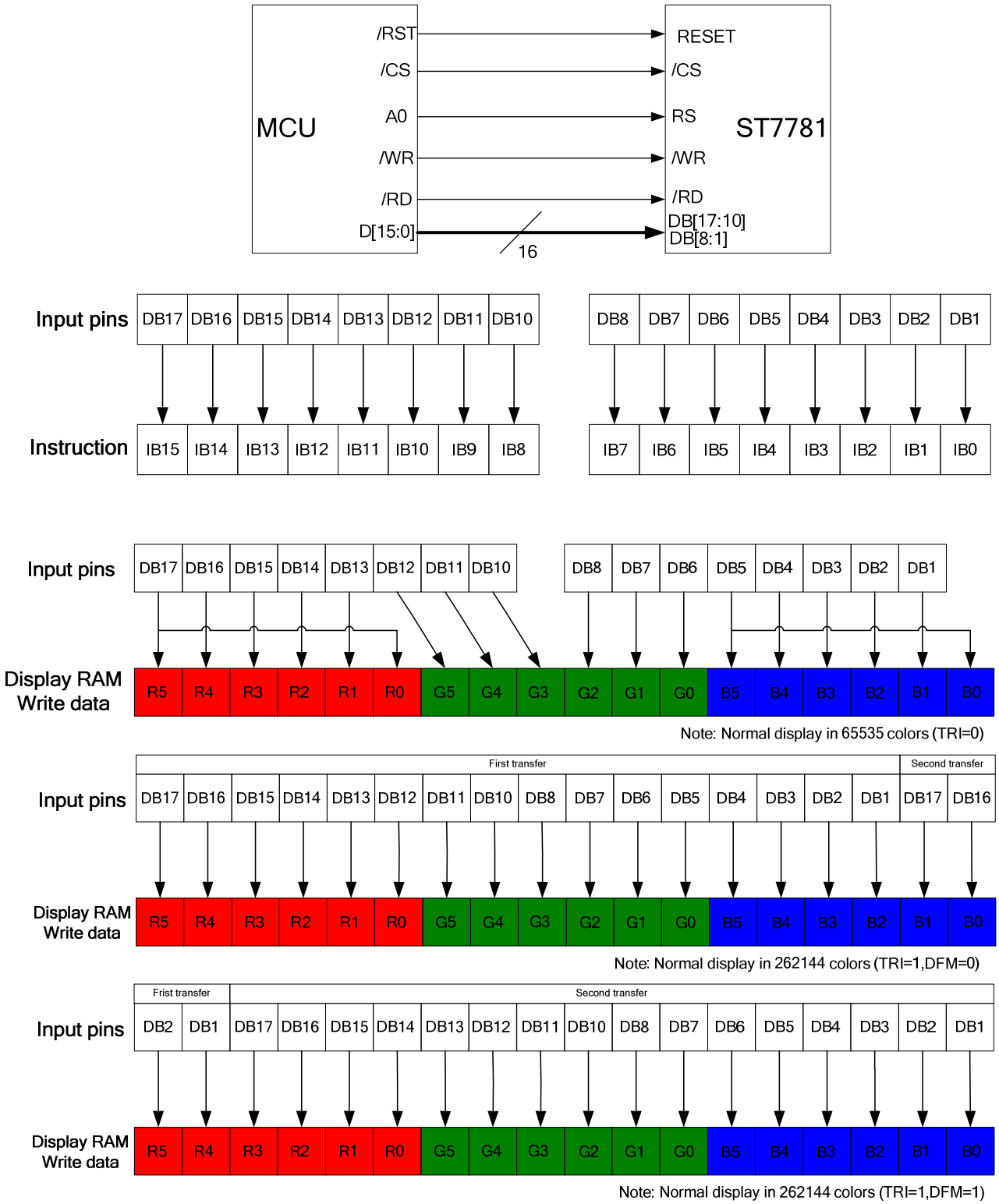

Fig. 9.4 8080-16 bits Interface Data Format (Command Write/Display RAM Write)

9.5 8080-9bits Interface Write Data Format

The 8080-9bits interface is selected by setting the IM [3:0] = “1011” and the DB [17:9] pins are used to transfer the data. When writing the 16-bit register, the data is divided into upper byte and lower byte and the upper byte is transferred first. The display data is also divided in upper byte (9 bits) and lower byte, and the upper byte is transferred first. The unused DB [8:0] pins must be tied to either VDDI or DGND.

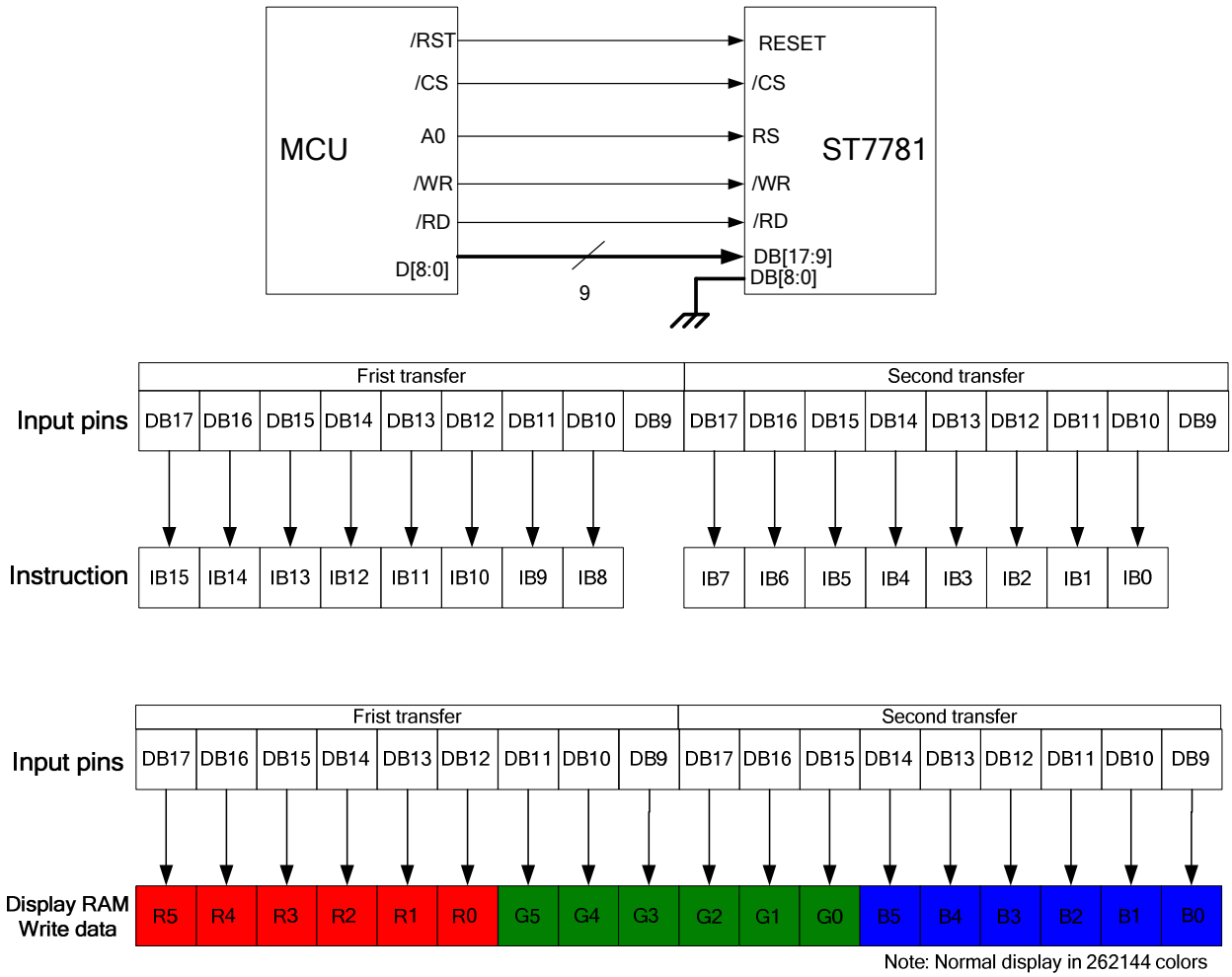

Fig. 9.5 8080-9 bits Interface Data Format (Command Write/Display RAM Write)

9.6 8080-8bits Interface Write Data Format

The 8080 8-bit interface is selected by setting the IM [3:0] as “0011” and the DB [17:10] pins are used to transfer the data. The mode can display 262k or 65k colors format. When writing the 16-bit register, the data is divided into upper byte lower byte and the upper byte is transferred first. The display data is also divided in upper byte (8 bits) and lower byte, and the upper byte is transferred first. The written data is expanded into 18 bits internally (see the figure below) and then written into DRAM. The unused DB [9:0] pins must be tied to either VDDI or DGND.

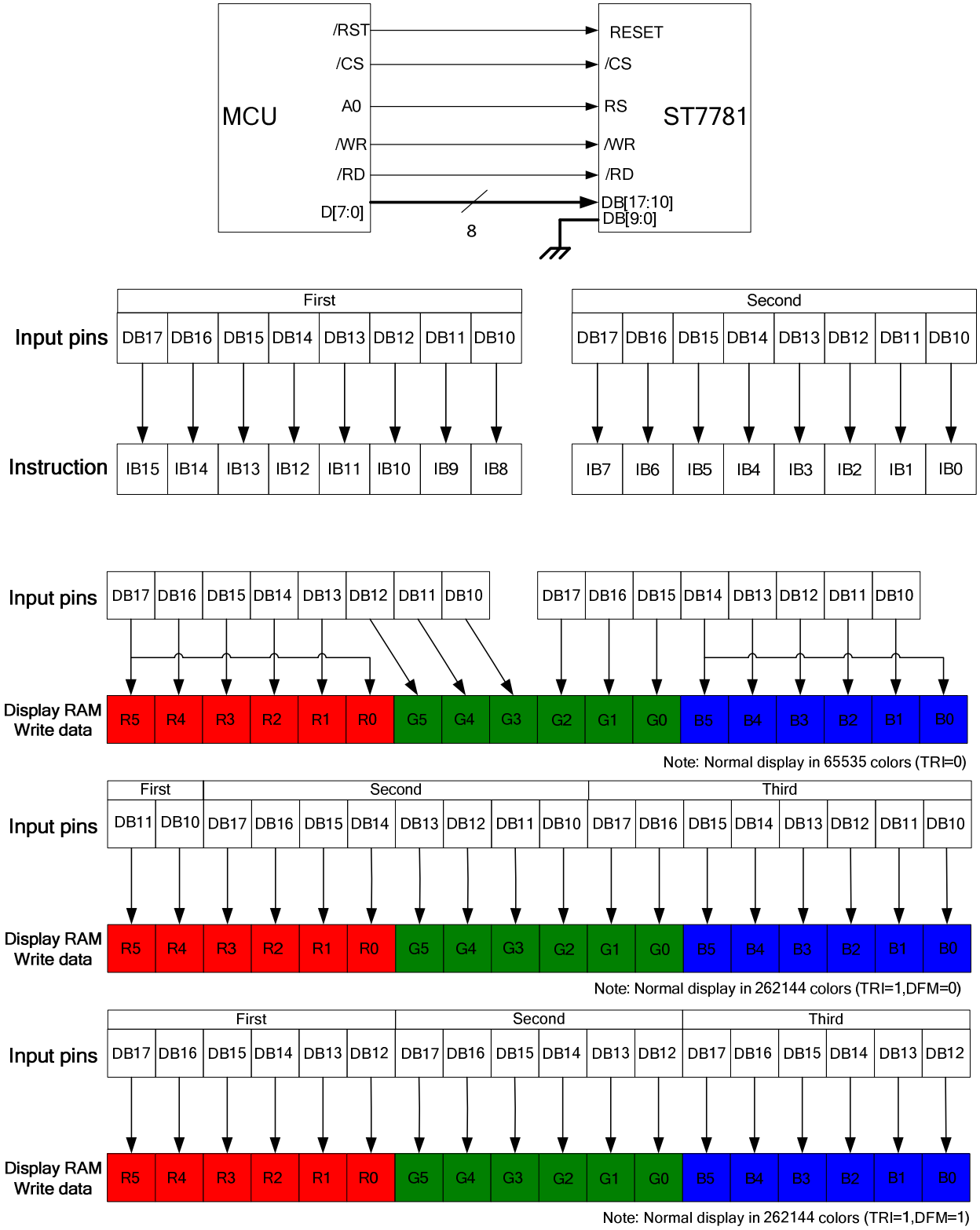

Fig. 9.6 8080-8 bits interface data format (command write/Display RAM write)

9.7 8080-series MCU Read Cycle Sequence

The read cycle (/RD "1"- "0"- "1" sequence) means that the host reads information from display via interface. The driver sends data (DB [17:0]) to the host when there is a falling edge of /RD and the host reads data when there is a rising edge of /RD.

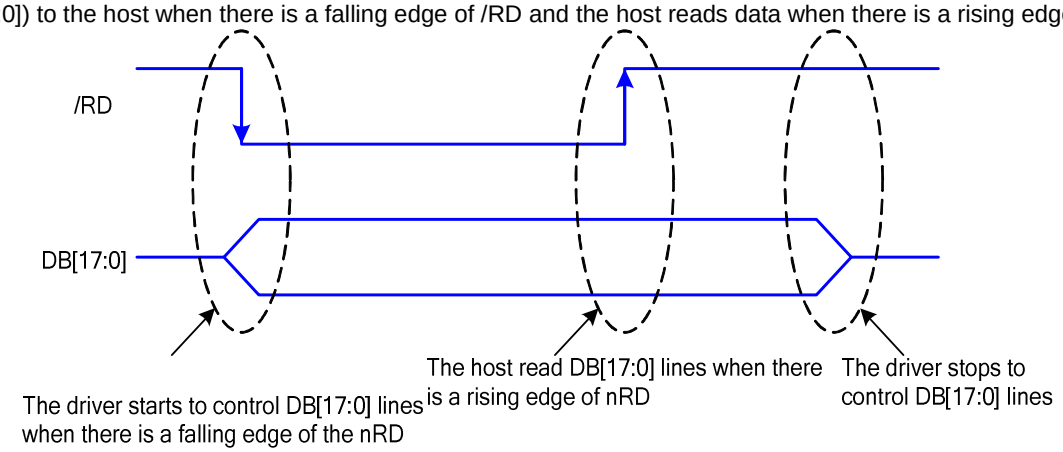

Fig. 9.7 8080-Series /RD Protocol

Note: /RD is an unsynchronized signal (It can be stopped).

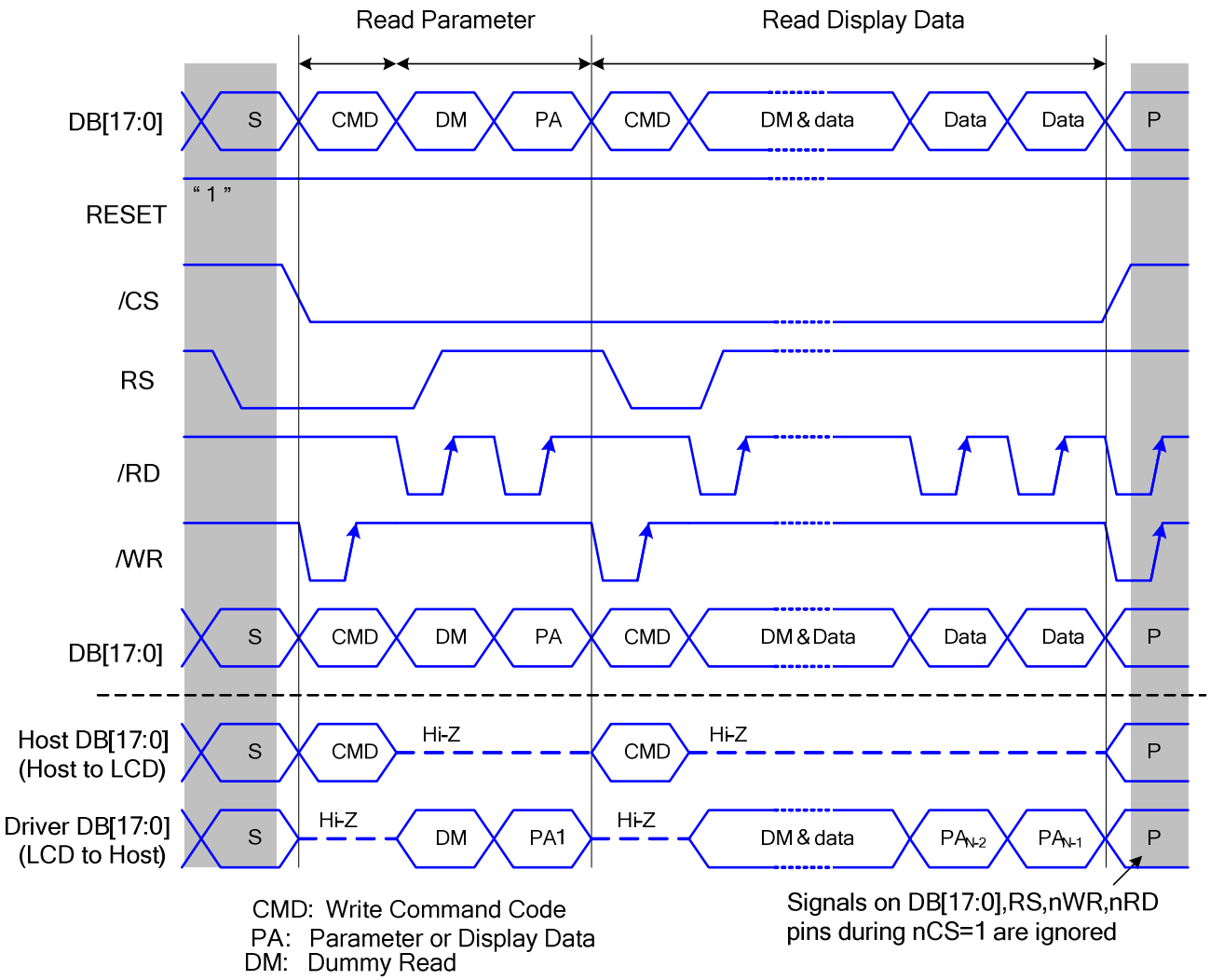

Fig. 9.7.1 8080-series parallel bus protocol, read data from register or display RAM

9.8 8080-18bits interface read data format

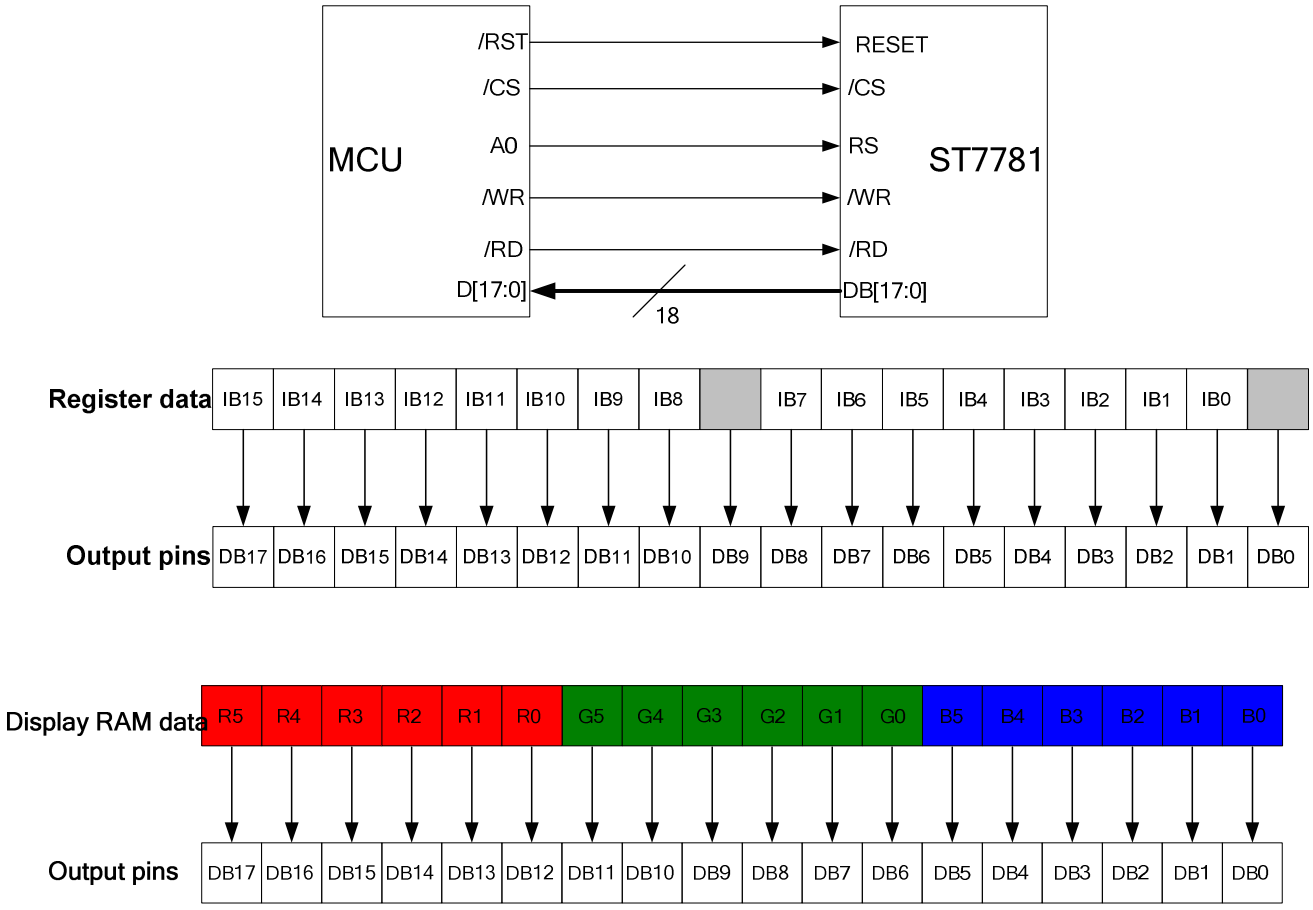

Fig. 9.8 8080-18 bits Interface Data Format (Command Read/Display RAM Read)

9.9 8080-16bits Interface Read Data Format

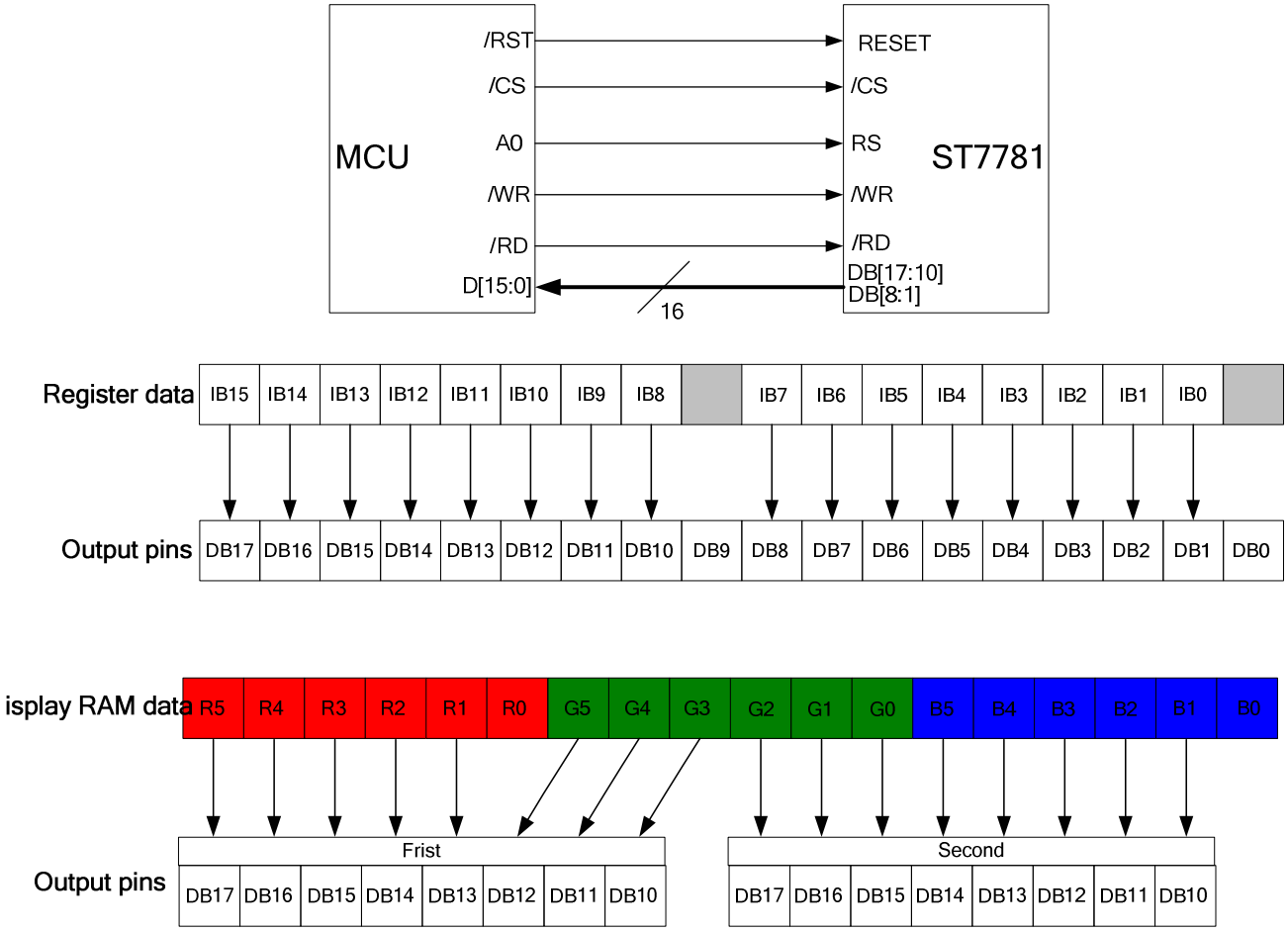

Fig. 9.9 8080-16 bits Interface Data Format (Command Read/Display RAM Read)

9.10 8080-9bits Interface Read Data Format

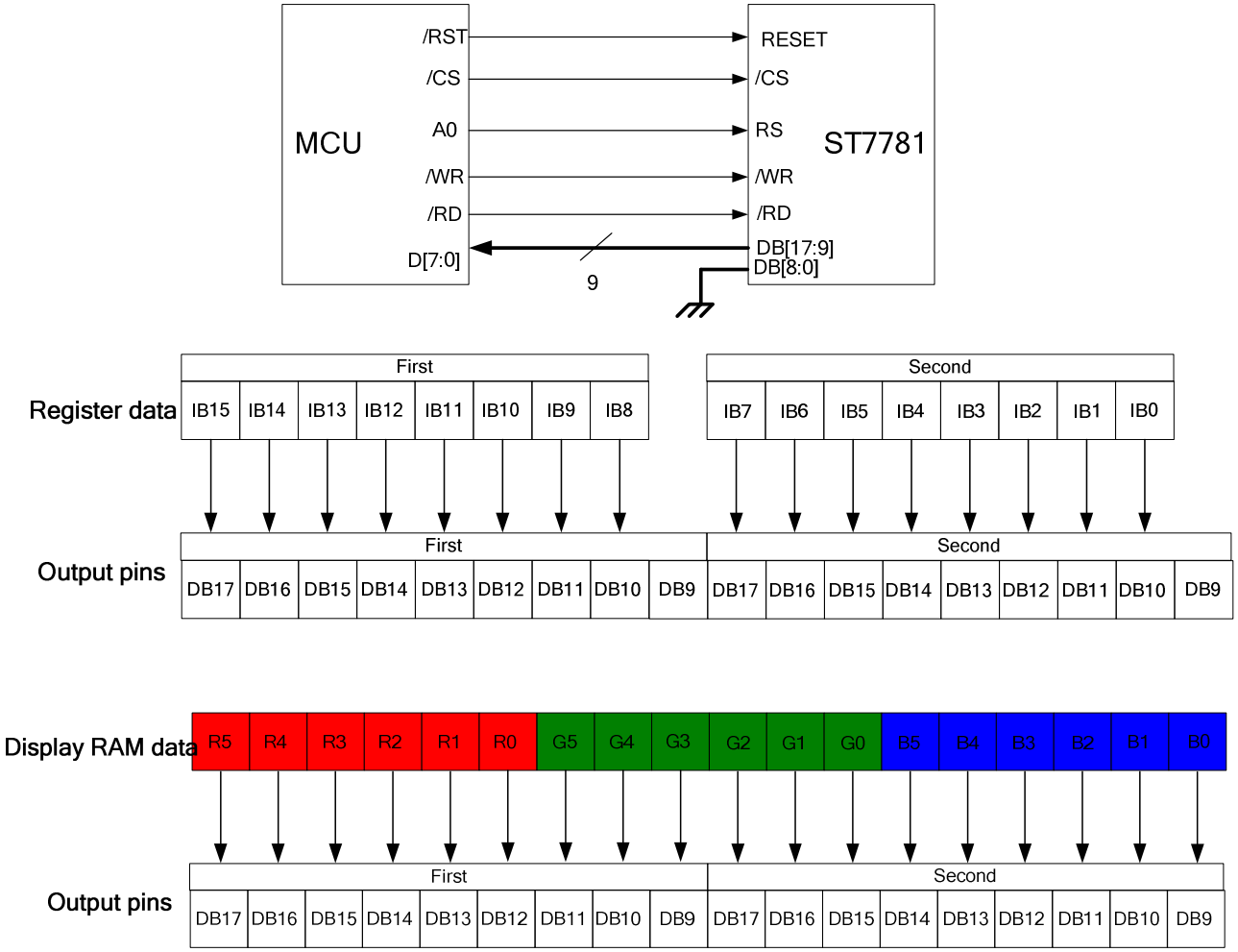

Fig. 9.10 8080-9 bits Interface Data Format (Command Read/Display RAM Read)

9.11 8080-8bits Interface Read Data Format

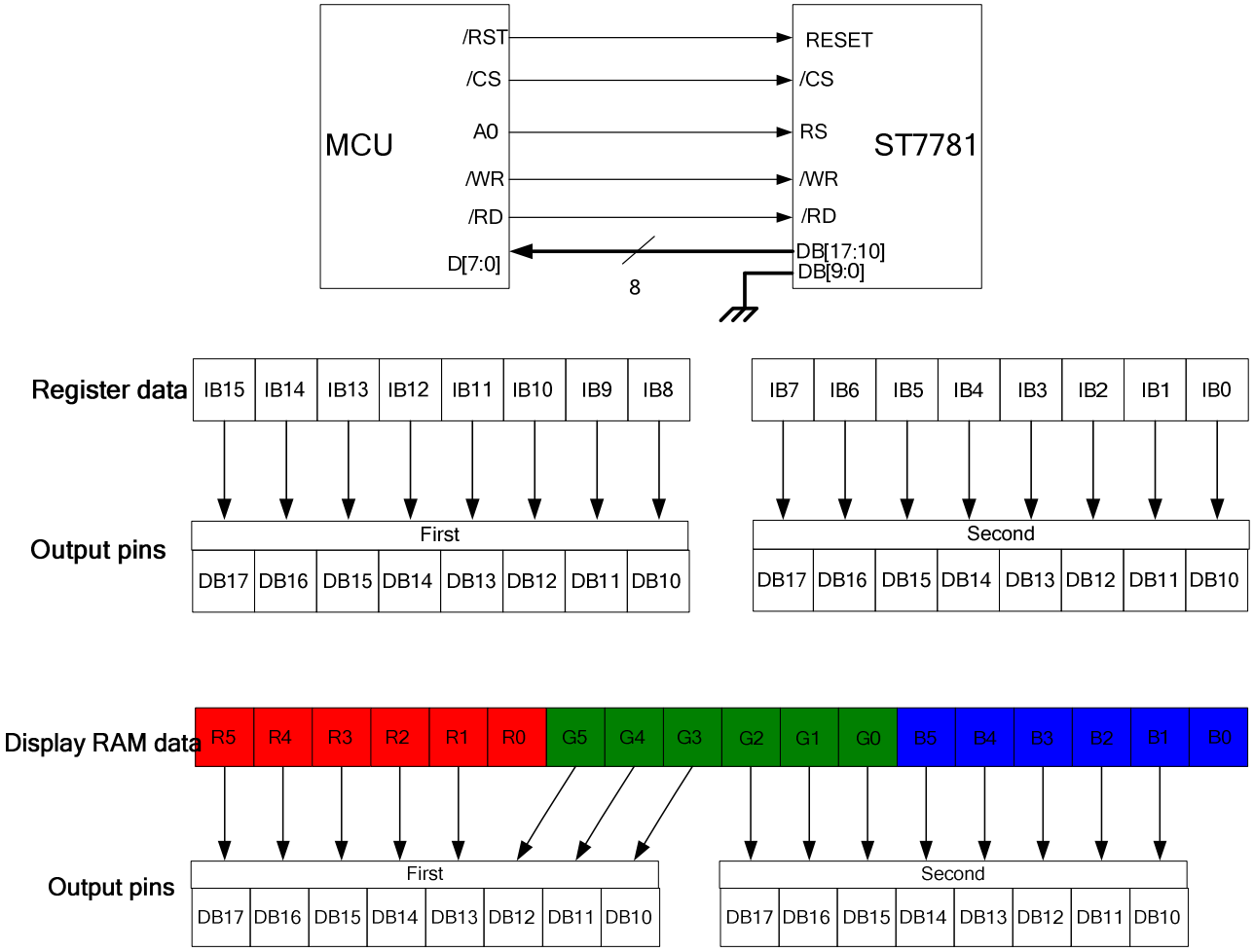

Fig.9.11 8080-8 bits Interface Data Format (Command Read/Display RAM Read)

DRAM Address map table of SS=1, BGR=1

GS = '1'	GS = '0'														
		SS = '0'	S1	S2	S3	S4	S5	S6	------	S715	S716	S717	S718	S719	S720
		SS = '1'	S718	S719	S720	S715	S716	S717	-------	S4	S5	S6	S1	S2	S3
		BGR='0'	R	G	B	R	G	B	-------	R	G	B	R	G	B
		BGR='1'	B	G	R	B	G	R		B	G	R	B	G	R
G320	G1	X Address	"0000"h			"0001"h			-------	"00EE"h			"00EF"h		
		Y Address	"0000"h			"0000"h				"0000"h			"0000"h		
G319	G2	X Address	"0000"h			"0001"h			-------	"00EE"h			"00EF"h		
		Y Address	"0001"h			"0001"h				"0001"h			"0001"h		
— — — —	— — — —	| | | |	| | | |			| | | |			-------	| | | |			| | | |		
G2	G319	X Address	"0000"h			"0001"h			-------	"00EE"h			"00EF"h		
		Y Address	"013E"h			"013E"h				"013E"h			"013E"h		
G1	G320	X Address	"0000"h			"0001"h			-------	"00EE"h			"00EF"h		
		Y Address	"013F"h			"013F"h				"013F"h			"013F"h		

Fig.9.12 DRAM Address Map Table

Note:

X Address** Start Instruction：**R50h

X Address** End Instruction：**R51h

Y Address** Start Instruction：**R52h

Y Address** End Instruction：**R53h

SS/GS** Setting Instruction：**R01h

BGR** Setting Instruction：**R03h

10 Serial Peripheral Interfaces (SPI)

10.1 General Description

The serial interface is a 3-lines interface for communication between the micro controller and the LCD driver chip.That is selected by setting IM [3:0] pins as “010X” level. The 3-lines serial use: /CS(chip enable), SCL (serial clock) , SDI (serial data input)and SDO(serial data output). Serial clock (SCL) is used for interface with MCU only, so it can be stopped when no communication is necessary. The DB [17:0] pins are not used, must be fixed at VDDI or DGND.The selections of this interface see the Table

IM3	IM2	IM1	IM0	Interface	RS	/RD	/WR	Read back selection
0	1	0	ID	3-line serial interface	N/A	N/A	SCL	DB[17:0]: unused Serial data input :SDI Serial data output:SDO

Table 10.1 Serial Interface Type Selection

Note: Unused pins connected to VDDI.

The SPI interface operation enables from the falling edge of /CS and ends of data transfer on the rising edge of /CS. The chip is selected when 6-bit device ID code in the start byte that be matched. Then ST7781 receive sub-sequent data that starts taking. The least significant bit of device ID code is determined by setting the IM0 pin.Example:IM0=”0”, ST7781 is selected when the device ID code=”011100” in the start byte. The seventh bit of start byte is RS bit and the eighth bit is R/W bit. That two bit control ST7781 some operation that description see Table

Start Byte Format							
Bit 1	Bit 2	Bit 3	Bit 4	Bit 5	Bit 6	Bit 7	Bit 8
Device ID code						RS	R/W
0	1	1	1	0	ID/IM0	0/1	0/1

RS and R/W Bit Function Description		
RS	R/W	Function
0	0	Set an index register
0	1	Read staus
1	0	Write a register or display RAM
1	1	Read a register

Table 10.1.1Start byte format and Bit [7:8] function description

10.2 Command Write Mode

The write mode of the interface means the micro controller writes commands to the LCD driver. Start byte data packet contains a control bit RS to indicates transmission data format. If RS is “low”, the transmission byte is interpreted as a command byte. If RS is “high”, the transmission byte is stored in the display data RAM (Memory write command), or command register as parameter.

Any instruction can be sent in any order to the driver. The MSB is transmitted first. The serial interface is initialized when /CS is “high”. In this state, SCL clock pulse or SDI data have no effect. A falling edge on /CS enables the serial interface and indicates the start of data transmission. When /CS is “1”, SCL clock is ignored. During the high time of /CS the serial interface is initialized. At the falling edge of /CS, SCL can be high or low. SDI is sampled at the rising edge of /CS. RS (Start byte bit 7) indicates, whether the input data is command code (RS=’0’) or parameter/RAM data (RS=’1’).

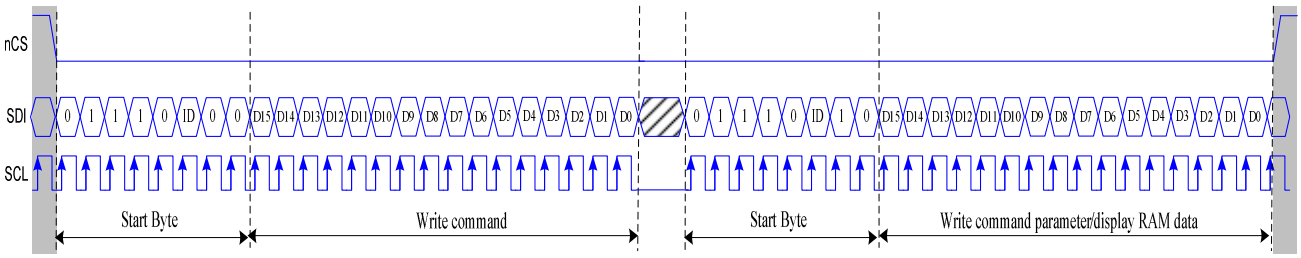

Fig. 10.2 3-line serial interface write protocol

10.3 Read Functions

The read mode of the interface means that the micro controller reads register value from the driver. To do that the micro controller first has to send a command and then the following start byte that setting read register operation (RS="1", R/W="1").In reading from command register status, after receiving the start byte, ST7781 starts to transfer the data in unit of byte and the data transfer starts from the MSB bit. All registers of ST7781 are 16-bit format and the first byte as upper eight of data. .

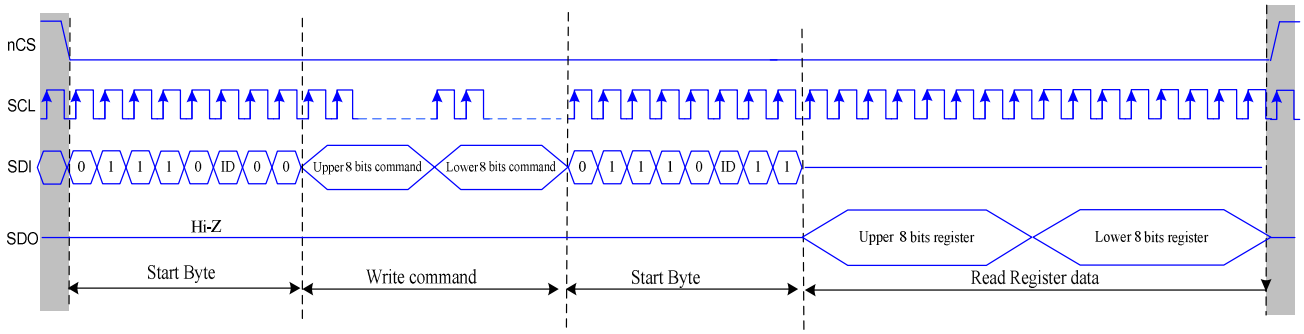

Fig. 10.3.1 3-line Serial Protocol for read command register

11. Register Descriptions

ST7781 adopts 18-bit bus interface architecture for high-performance microprocessor. All the functional Blocks of ST7781 starts to work after receiving the correct instruction from the external microprocessor by the 18-, 16-, 9-, 8-bit interface. The index register (IR) stores the register address to which the instructions and Display data will be written. The register selection signal (RS), the read/write signals (/RD//WR) and data bus DB[17:0] are used to read/write the instructions and data of ST7781. The registers of the ST7781 are categorized into the following groups.

1. Specify the index of register (IR)
2. Read a status
3. Display control
4. Power management Control
5. Graphics data processing
6. Set internal DRAM address (AC)
7. Transfer data to/from the internal DRAM (R22)
8. Internal grayscale γ-correction (R30 ~ R3D)

Normally, the display data (DRAM) is most often updated, and in order since the ST7781 can update internal DRAM address automatically as it writes data to the internal DRAM and minimize data transfer by using the window address function, there are fewer loads on the program in the microprocessor. The way of assigning data to the 16 register bits (DB [15:0]) varies for each interface. Send registers in accordance with the following data transfer format.

11.1 Instruction Description

No	Registers	W/R	RS	D15	D14	D13	D12	D11	D10	D9	D8	D7	D6	D5	D4	D3	D2	D1	D0
IR	Index Register	W	0	-	-	-	-	-	-	-	-	ID7	ID6	ID5	ID4	ID3	ID2	ID1	ID0
00h	Driver ID Code Read	R	1	0	1	1	1	0	1	1	1	1	0	0	0	0	0	1	1
01h	Driver Output Control	W	1	0	0	0	0	0	SM	0	SS	0	0	0	0	0	0	0	0
02h	LCD Driving Wave Control	W	1	0	0	0	0	0	1	BC0	EOR	0	0	0	0	0	0	0	0
03h	Entry Mode	W	1	TRI	DFM	0	BGR	0	0	HWM	0	0	0	I/D1	I/D0	AM	0	0	0
04h	Resize Control	W	1	0	0	0	0	0	0	RCV1	RCV0	0	0	RCH1	RCH0	0	0	RSZ1	RSZ0
07h	Display Control 1	W	1	0	0	PTDE1	PTDE0	0	0		BASEE	0	0	GON	DTE	CL	0	D1	D0
08h	Display control 2	W	1	0	FP6	FP5	FP4	FP3	FP2	FP1	FP0	0	BP6	BP5	BP4	BP3	BP2	BP1	BP0
09h	Display Control 3	W	1	0	0	0	0	0	PTS2	PTS1	PTS0	0	0	PTG1	PTG0	ISC3	ISC2	ISC1	ISC0
0Ah	Display Control 4	W	1	0	0	0	0	0	0	0	0	0	0	0	0	FMARKOE	FMI2	FMI1	FMI0
0Dh	Frame Marker Position	W	1	0	0	0	0	0	0	0	FMP8	FMP7	FMP6	FMP5	FMP4	FMP3	FMP2	FMP1	FMP0
10h	Power Control 1	W	1	0	0	0	SAP	0	BT2	BT1	BT0	APE	AP2	AP1	AP0	0	0	STB	0
11h	Power Control 2	W	1	0	0	0	0	0	DC12	DC11	DC10	0	DC02	DC01	DC00	0	VC2	VC1	VC0
12h	Power Control 3	W	1	0	0	0	0	0	0	0	0	VCIRE	0	0	0	VRH3	VRH2	VRH1	VRH0
13h	Power Control 4	W	1	0	0	0	VDV4	VDV3	VDV2	VDV1	VDV0	0	0	0	0	0	0	0	0
20h	DRAM Horizontal Address Set	W	1	0	0	0	0	0	0	0	0	AD7	AD6	AD5	AD4	AD3	AD2	AD1	AD0
21h	DRAM Vertical Address Set	W	1	0	0	0	0	0	0	0	AD16	AD15	AD14	AD13	AD12	AD11	AD10	AD9	AD8
22h	Write Data to DRAM	W	1	DRAM Write Data (WD17-0) / Read Data (RD17-0)															
22h	Read Data from DRAM	R	1																
29h	VCOMH Control	W	1	0	0	0	0	0	0	0	0	0	0	VCM5	VCM4	VCM3	VCM2	VCM1	VCM0
2Bh	Frame Rate and Color Control	W	1	0	0	0	0	0	0	0	0	0	0	0	0	FRS3	FRS2	FRS1	FRS0
30h	Gamma Control 1	W	1	0	0	0	0	0	KP1[2]	KP1[1]	KP1[0]	0	0	0	0	0	KP0[2]	KP0[1]	KP0[0]
31h	Gamma Control 2	W	1	0	0	0	0	0	KP3[2]	KP3[1]	KP3[0]	0	0	0	0	0	KP2[2]	KP2[1]	KP2[0]
32h	Gamma Control 3	W	1	0	0	0	0	0	KP5[2]	KP5[1]	KP5[0]	0	0	0	0	0	KP4[2]	KP4[1]	KP4[0]
35h	Gamma Control 4	W	1	0	0	0	0	0	RP1[2]	RP1[1]	RP1[0]	0	0	0	0	0	RP0[2]	RP0[1]	RP0[0]
36h	Gamma Control 5	W	1	0	0	0	VRP1[4]	VRP1[3]	VRP1[2]	VRP1[1]	VRP1[0]	0	0	0	0	VRP0[3]	VRP0[2]	VRP0[1]	VRP0[0]
37h	Gamma Control 6	W	1	0	0	0	0	0	KN1[2]	KN1[1]	KN1[0]	0	0	0	0	0	KN0[2]	KN0[1]	KN0[0]
38h	Gamma Control 7	W	1	0	0	0	0	0	KN3[2]	KN3[1]	KN3[0]	0	0	0	0	0	KN2[2]	KN2[1]	KN2[0]
39h	Gamma Control 8	W	1	0	0	0	0	0	KN5[2]	KN5[1]	KN5[0]	0	0	0	0	0	KN4[2]	KN4[1]	KN4[0]
3Ch	Gamma Control 9	W	1	0	0	0	0	0	RN1[2]	RN1[1]	RN1[0]	0	0	0	0	0	RN0[2]	RN0[1]	RN0[0]
3Dh	Gamma Control 10	W	1	0	0	0	VRN1[4]	VRN1[3]	VRN1[2]	VRN1[1]	VRN1[0]	0	0	0	0	VRN0[3]	VRN0[2]	VRN0[1]	VRN0[0]
50h	Horizontal Address Start Position	W	1	0	0	0	0	0	0	0	0	HSA7	HSA6	HSA5	HSA4	HSA3	HSA2	HSA1	HSA0
51h	Horizontal Address End Position	W	1	0	0	0	0	0	0	0	0	HEA7	HEA6	HEA5	HEA4	HEA3	HEA2	HEA1	HEA0
52h	Vertical Address Start Position	W	1	0	0	0	0	0	0	0	VSA8	VSA7	VSA6	VSA5	VSA4	VSA3	VSA2	VSA1	VSA0
53h	Vertical Address End Position	W	1	0	0	0	0	0	0	0	VEA8	VEA7	VEA6	VEA5	VEA4	VEA3	VEA2	VEA1	VEA0
60h	Gate Scan Control 1	W	1	GS	0	NL5	NL4	NL3	NL2	NL1	NL0	0	0	SCN5	SCN4	SCN3	SCN2	SCN1	SCN0
61h	Gate Scan Control 2	W	1	0	0	0	0	0	0	0	0	0	0	0	0	0	NDL	VLE	REV
80h	Partial Image 1 Display Position	W	1	0	0	0	0	0	0	0	PTDP08	PTDP07	PTDP06	PTDP05	PTDP04	PTDP03	PTDP02	PTDP01	PTDP00
81h	Partial Image 1 Start Address	W	1	0	0	0	0	0	0	0	PTSA08	PTSA07	PTSA06	PTSA05	PTSA04	PTSA03	PTSA02	PTSA01	PTSA00
82h	Partial Image 1 End Address	W	1	0	0	0	0	0	0	0	PTEA08	PTEA07	PTEA06	PTEA05	PTEA04	PTEA03	PTEA02	PTEA01	PTEA00
83h	Partial Image 2 Display Position	W	1	0	0	0	0	0	0	0	PTDP18	PTDP17	PTDP16	PTDP15	PTDP14	PTDP13	PTDP12	PTDP11	PTDP10
84h	Partial Image 2 Start Address	W	1	0	0	0	0	0	0	0	PTSA18	PTSA17	PTSA16	PTSA15	PTSA14	PTSA13	PTSA12	PTSA11	PTSA10
85h	Partial Image 2 End Address	W	1	0	0	0	0	0	0	0	PTEA18	PTEA17	PTEA16	PTEA15	PTEA14	PTEA13	PTEA12	PTEA11	PTEA10
90h	Panel Interface Control 1	W	1	0	0	0	0	0	0	DIVI1	DIVI0	0	RTNI6	RTNI5	RTNI4	RTNI3	RTNI2	RTNI1	RTNI0
92h	Panel Interface Control 2	W	1	0	0	0	0	0	NOWI2	NOWI1	NOWI0	0	0	0	0	0	0	0	0
D2h	EEPROM ID Code	W	1	0	0	0	0	0	0	0	0	0	ID6	ID5	ID4	ID3	ID2	ID1	ID0
D9h	EEPROM Control Status	W	1	0	0	0	0	0	0	0	0	0	ID_EN	VCM_EN	0	0	0	0	0
DFh	EEPROM Wite Command	W	1	0	0	0	0	0	0	0	0	EE_IB7	EE_IB6	EE_IB5	EE_IB4	EE_IB3	EE_IB2	EE_IB1	EE_IB0
				0	0	0	0	0	0	0	0	EE_CMD7	EE_CMD6	EE_CMD5	EE_CMD4	EE_CMD3	EE_CMD2	EE_CMD1	EE_CMD0
				0	0	0	0	0	0	0	0	1	0	1	0	0	1	0	1
FAh	EEPROM Enable	W	1	0	0	0	0	0	0	0	0	0	0	0	0	0	0	MTPPROG	0
FEh	EEPROM VCOM Offset	W	1	0	0	0	0	0	0	0	0	0	0	0	VCMF4	VCMF3	VCMF2	VCMF1	VCMF0
FFh	FAh/FEh Enable	W	1	0	0	0	0	0	0	0	0	0	0	0	0	0	0	0	FXEN

11.1.1 Index (IR)

Index(IR)																		
RS	**/WR**	**/RD**	**D15**	**D14**	**D13**	**D12**	**D11**	**D10**	**D9**	**D8**	**D7**	**D6**	**D5**	**D4**	**D3**	**D2**	**D1**	**D0**
0	↑	1	-	-	-	-	-	-	-	-	ID7	ID6	ID5	ID4	ID3	ID2	ID1	ID0

Note: "-"Don't care

Description	The index register specifies the index R00h to RFFh of the control register or RAM control to be accessed. The access to the register and instruction bits in it is prohibited unless the index is specified in the index register.

11.1.2 Device ID Code Read (R00h)

Device ID Code Read Out (R00h)																		
RS	**/WR**	**/RD**	**D15**	**D14**	**D13**	**D12**	**D11**	**D10**	**D9**	**D8**	**D7**	**D6**	**D5**	**D4**	**D3**	**D2**	**D1**	**D0**
1	1	↑	0	1	1	1	0	1	1	1	1	0	0	0	0	0	1	1

Description	When read this register, the device output device ID code

11.1.3 Device Output Control (R01H)

Device Output Control (R01H)																		
RS	**/WR**	**/RD**	**D15**	**D14**	**D13**	**D12**	**D11**	**D10**	**D9**	**D8**	**D7**	**D6**	**D5**	**D4**	**D3**	**D2**	**D1**	**D0**
1	↑	1	0	0	0	0	0	SM	0	SS	0	0	0	0	0	0	0	0
Default value			0	0	0	0	0	0	0	0	0	0	0	0	0	0	0	0

Description

SS: Select the shift direction of outputs from the source driver.
When SS = 0, the shift direction of outputs is from S1 to S720
When SS = 1, the shift direction of outputs is from S720 to S1.
In addition to the shift direction, the settings for both SS and BGR bits are required to change the Assignment of R, G, B dots to the source driver pins.
To assign R, G, B dots to the source driver pins from S1 to S720, set SS = 0.
To assign R, G, B dots to the source driver pins from S720 to S1, set SS = 1.

Note: When changing SS or BGR bits, DRAM data must be rewritten.

SM: Sets the gate driver pin arrangement in combination with the GS bit (R60h) to select the optimal scan mode for the module.

SM	GS	Scan Direction	Gate Output Sequence
0	0	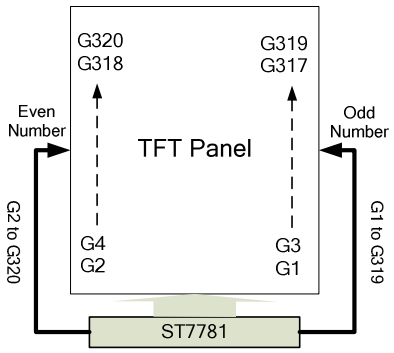	G1,G2,G3,G4…..,G316 G317,G318,G319, G320

		0	1	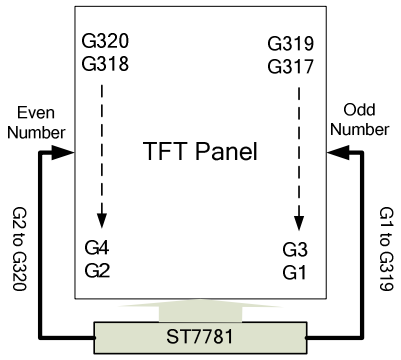	G320,G319,……..…G316 G7,G6,G5,G4,G3,G2,G1
		1	0	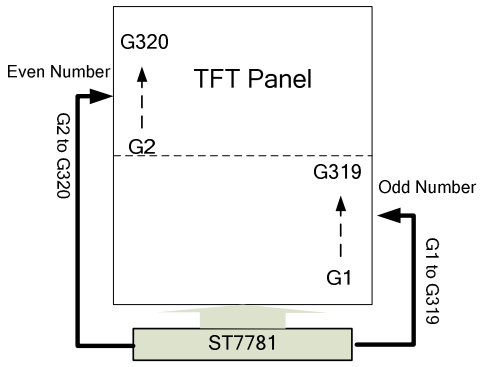	G1,G3,G5…….G311 G313,G315,G317,G319 G2,G4,G6…….G312 G314,G316,G318,G320
		1	1	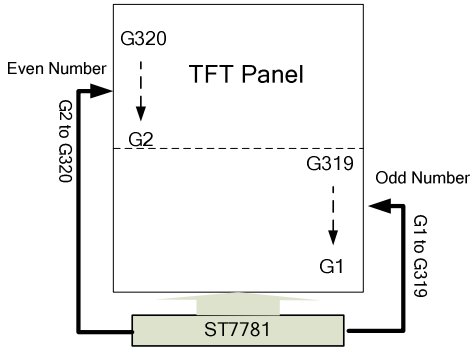	G320,G318,……..G14 G12,G10,G8,G6,G4,G2 G319,G317……..G13 G11,G9,G7,G5,G3,G1

11.1.4 LCD Driving Wave Control (R02h)

LCD Driving Wave Control (R02h)																		
RS	**/WR**	**/RD**	**D15**	**D14**	**D13**	**D12**	**D11**	**D10**	**D9**	**D8**	**D7**	**D6**	**D5**	**D4**	**D3**	**D2**	**D1**	**D0**
1	↑	1	0	0	0	0	0	1	B/C	EOR	0	0	0	0	0	0	0	0
Default value			0	0	0	0	0	1	0	0	0	0	0	0	0	0	0	0

Description	**B/C**: VCOM Driving Wave Control. When B/C = 0, the frame/field inversion is selected When B/C = 1 and EOR=1, the line inversion is selecte.

11.1.5 Entry Mode (R03h)

Entry Mode (R03h)																		
RS	**/WR**	**/RD**	**D15**	**D14**	**D13**	**D12**	**D11**	**D10**	**D9**	**D8**	**D7**	**D6**	**D5**	**D4**	**D3**	**D2**	**D1**	**D0**
1	↑	1	TRI	DFM	0	BGR	0	0	HWM	0	0	0	I/D1	I/D0	AM	0	0	0
Default value			0	0	0	0	0	0	0	0	0	0	1	1	0	0	0	0

Description

AM: Sets the DRAM Updata Direction
When AM = “0”, set the horizontal writing direction.
When AM = “1”, set the vertical writing direction.
When a window area is set by registers R50h ~R53h, only the addressed DRAM area is updated based on I/D [1:0] and AM bits setting.

I/D [1:0]: Control the address counter (AC) to automatically increase or decrease by 1 when update one pixel display data.

AM	ID[1:0]	Write DRAM Direction	AM	ID[1:0]	Write DRAM Direction
0	00	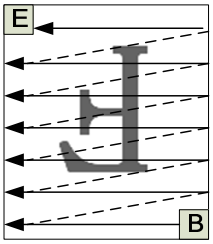	1	00	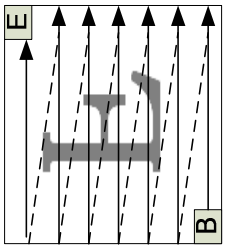
0	01	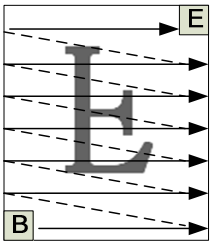	1	01	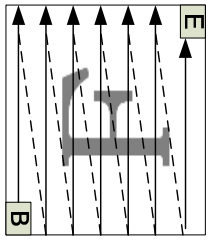
0	10	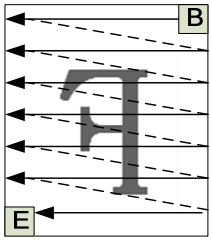	1	10	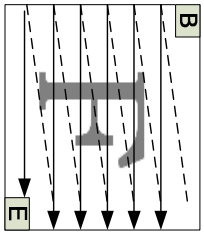
0	11	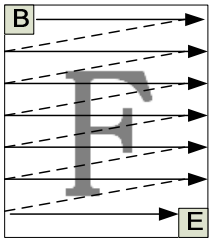	1	11	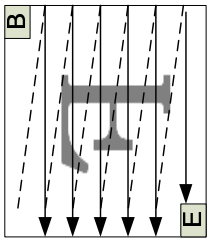

HWM: The ST7781 writes data in high speed with low power consumption by setting HWM = 1. The data to be written within the window address area is buffered in order to write the data in units of horizontal lines. This can minimize the Number of RAM access and the power consumption required in data write operation.
When HWM = 1, make sure to set AM = 0 (horizontal direction) and write the data in each horizontal line of the window address area at a time. If the data is not enough to rewrite the horizontal line of the window address area, the DRAM data in that line is not overwritten.

Notes1: The ST7781 requires no dummy write operation in high-speed write operation.
Note 2. When terminating DRAM data write operation in the middle of the line and executing another instruction, the data in the buffer is cleared.

BGR: Reverses the order from RGB to BGR in writing 18-bit pixel data in the DRAM.
BGR = 0: Write data in the order of RGB to the DRAM.

BGR=0																	
D17	**D16**	**D15**	**D14**	**D13**	**D12**	**D11**	**D10**	**D9**	**D8**	**D7**	**D6**	**D5**	**D4**	**D3**	**D2**	**D1**	**D0**
R5	R4	R3	R2	R1	R0	G5	G4	G3	G2	G1	G0	B5	B4	B3	B2	B1	B0

BGR = 1: Reverse the order from RGB to BGR in writing data to the DRAM.

BGR=1																	
D17	**D16**	**D15**	**D14**	**D13**	**D12**	**D11**	**D10**	**D9**	**D8**	**D7**	**D6**	**D5**	**D4**	**D3**	**D2**	**D1**	**D0**
B5	B4	B3	B2	B1	B0	G5	G4	G3	G2	G1	G0	R5	R4	R3	R2	R1	R0

TRI: When TRI = “1”, data are transferred to the internal DRAM in 8-bit x 3 transfers mode via the 8-bit interface.It is also possible to send data via the 16-bit interface in the transfer mode that realizes display in 262k colors in combination with DFM bits. When not using these interface modes, be sure to set TRI = “0”.

DFM: Set the mode of transferring data to the internal RAM when TRI = “1”.

TRI	DFM	8080-16bits Interface Color Format
0	*	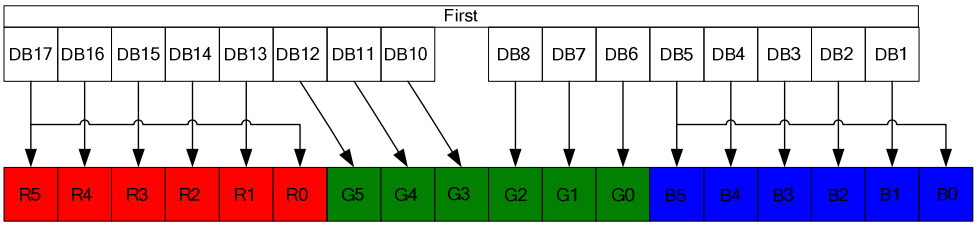
1	0	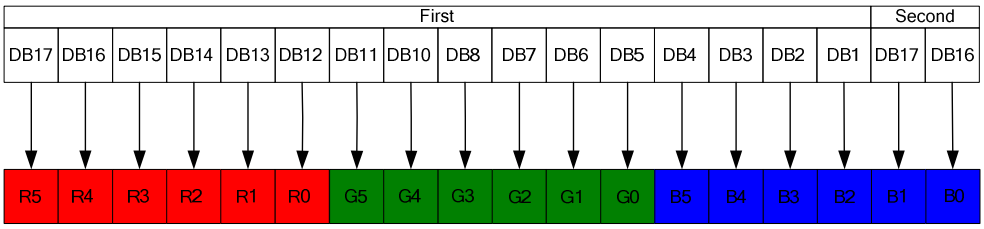
1	1	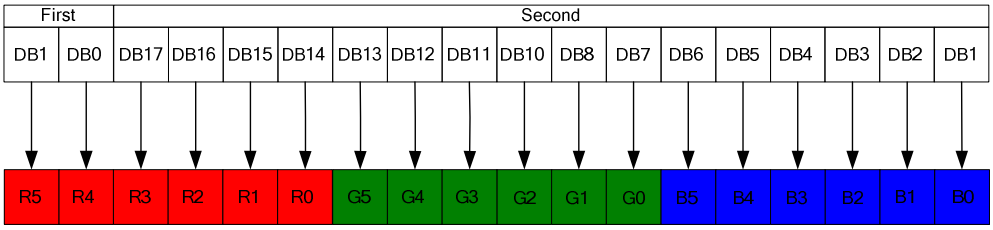

TRI	DFM	8080-8bits Interface Color Format
0	*	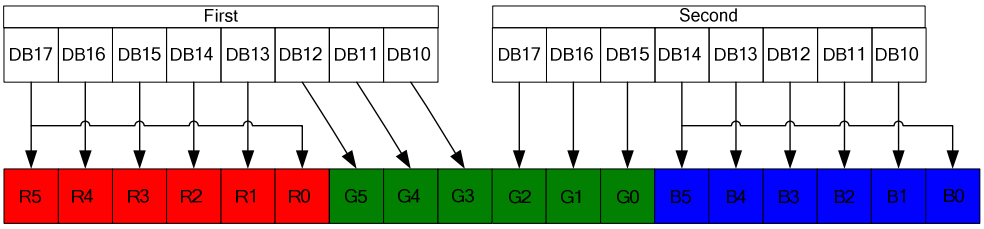
1	0	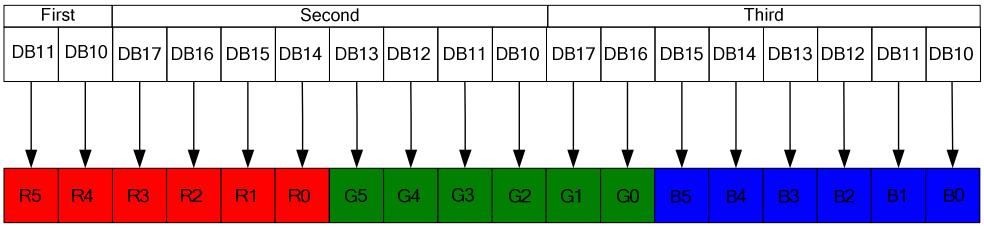
1	1	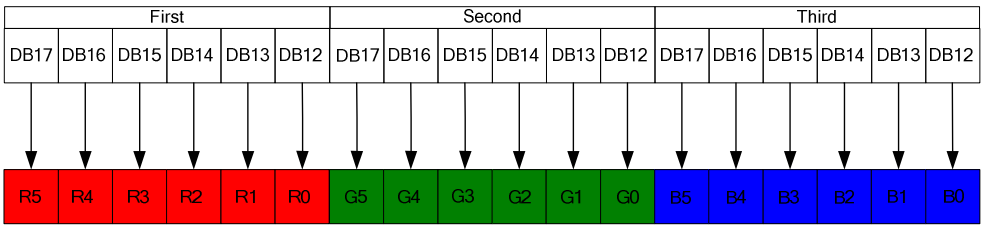

11.1.6 Resizing Control (R04h)

Resizing Control (R04h)																		
RS	**/WR**	**/RD**	**D15**	**D14**	**D13**	**D12**	**D11**	**D10**	**D9**	**D8**	**D7**	**D6**	**D5**	**D4**	**D3**	**D2**	**D1**	**D0**
1	↑	1	0	0	0	0	0	0	RCV 1	RCV 0	0	0	RCH1	RCH 0	0	0	RSZ 1	RSZ 0
Default value			0	0	0	0	0	0	0	0	0	0	0	0	0	0	0	0

Description

RSZ [1:0]: Sets the resizing factor. When the RSZ [1:0] are set for resizing, the ST7781 writes the data according to the resizing factor so that the original image is displayed in horizontal and vertical dimensions contracted according to the factor.

RSZ1	RSZ0	Resizing Scale
0	0	No Resizing (X1)
0	1	X 1/2
1	0	Setting Inhibited
1	1	X1/4

RCH [1:0]: Sets the number of pixels made as the remainder in horizontal direction when resizing a picture. By specifying the number of remainder pixels with RCH [1:0] the data can be transferred without taking the reminder pixels into consideration. Make sure that RCH [1:0] = "00" when not using the resizing function (RCH [1:0]="00") or there are no remainder pixels.

RCH1	RCH0	Number of Remainder Pixels in Horizontal Direction
0	0	0 Pixel
0	1	1 Pixel
1	0	2 Pixel
1	1	3 Pixel

RCV [1:0]: Sets the number of pixels made as the remainder in vertical direction when resizing a picture.By specifying the number of remainder pixels with the RCV bits, the data can be transferred without taking the reminder pixels into consideration. Make sure that RCV [1:0] ="00 "when not using the resizing function RCV [1:0] ="00 "or there are no remainder pixels.

RCV1	RCV0	Number of Remainder Pixels in Vertical Direction
0	0	0 Pixel
0	1	1 Pixel
1	0	2 Pixel
1	1	3 Pixel

11.1.7 Display Control 1 (R07h)

Display Control 1 (R07h)																		
RS	**/WR**	**/RD**	**D15**	**D14**	**D13**	**D12**	**D11**	**D10**	**D9**	**D8**	**D7**	**D6**	**D5**	**D4**	**D3**	**D2**	**D1**	**D0**
1	↑	1	0	0	PTDE1	PTDE0	0	0	0	BASEE	0	0	GON	DTE	CL	0	D1	D0
Default value			0	0	0	0	0	0	0	0	0	0	0	0	0	0	0	0

Description

D [1:0]: A graphics display is turned on the screen when writing D1 = "1", and is turned off when writing D1 = "0". When writing D1 = "0", the graphics display data is retained in the internal DRAM and the ST7781 displays the data when writing D1 = "1". When D1 = "0", i.e. while no display is shown on the panel, all source outputs becomes the GND level to reduce charging/discharging current, which is generated within the LCD while driving liquid crystal with AC voltage.

When the display is turned off by setting D [1:0] =00, the ST7781's internal display operation is halted completely. In combination with the GON setting, the D [1:0] setting controls display ON/OFF.

D1	D0	BASEE	Source,VCOM Output	Internal Operation
0	0	0	GND	Halt
0	1	1	GND	Operate
1	0	0	Non-lit display	Operate
1	1	0	Non-lit display	Operate
1	1	1	Base Image display	Operate

Note1: Data write operation from the microcontroller is performed irrespective of the setting of D [1:0] bits.
Note2: The D [1:0] setting is valid on both 1st and 2nd displays.

Note3: The non-lit display level from the source output pins is determined by instruction (PTS).

CL: When CL = "1", the ST7781 halt grayscale amplifiers to display 8-color with low power consumption. When setting 8-color display mode, follow the sequence of 8-color display mode setting.

CL	Display color
0	262,144
1	8

Note: When CL = 1, do not write the data corresponding to the grayscales, for which the operation of amplifier is halted.

GON, DTE: The combination of GON and DTE settings set the output level form gate lines (G1 ~ G320).

GON	DTE	Gate Output
0	0	VGH
0	1	VGH
1	0	VGL
1	1	Normal display

BASEE: Base image display enable bit.
BASEE = 0: No base image is displayed. The ST7781 drives liquid crystal with non-lit display level or drives only partial image display areas.
BASEE = 1: A base image is displayed on the screen.

PTDE [1:0]: Partial image 2 and Partial image 1 enable bits
PTDE1/0 = 0: turns off partial image. Only base image is displayed.
PTDE1/0 = 1: turns on partial image.

11.1.8 Display Control 2 (R08h)

Display Control 2 (R08h)																		
RS	**/WR**	**/RD**	**D15**	**D14**	**D13**	**D12**	**D11**	**D10**	**D9**	**D8**	**D7**	**D6**	**D5**	**D4**	**D3**	**D2**	**D1**	**D0**
1	↑	1	0	FP6	FP5	FP4	FP3	FP2	FP1	FP0	0	BP6	BP5	BP4	BP3	BP2	BP1	BP0
Default value			0	0	0	0	0	0	0	0	0	0	0	0	0	0	0	0

Description

FP[6:0] BP[6:0]	Porch Lines
7'h00	Setting Prohibited
7'h01	Setting Prohibited
7'h02	2 lines
7'h03	3 lines
7'h04	4 lines
7'h05	5 lines
7'h06	6 lines
7'h07	7 lines
7'h08	8 lines
7'h09	9 lines
7'h0A	10 lines
7'h0B	11 lines
:	:
7'h7D	125 lines
7'h7E	126 lines
7'h7F	127 lines

FP [6:0]: Sets the number of lines for a front porch period (a blank period following the end of display).
BP [6:0]: Sets the number of lines for a back porch period (a blank period made before the beginning of display).
Note:IN 8080 interface operation mode, BP>=2 lines, FP>=2 lines

In external display interface operation, a back porch (BP) period starts on the falling edge of the FMARK signal and the display operation starts after the back porch period. A blank period will start after a front porch (FP) period and it will continue until next FMARK input is detected.

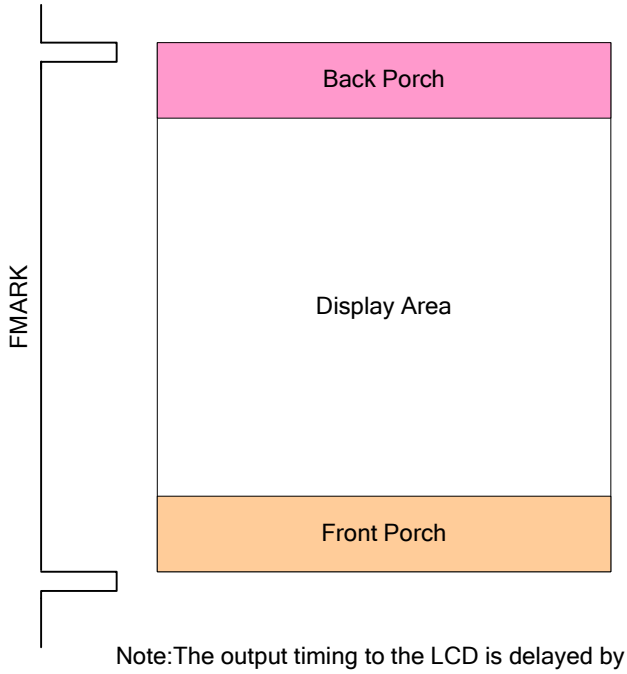

Note:The output timing to the LCD is delayed by 2 lines period from the input FMARK signal.

11.1.9 Display Control 3 (R09h)

Display Control 3 (R09h)																		
RS	**/WR**	**/RD**	**D15**	**D14**	**D13**	**D12**	**D11**	**D10**	**D9**	**D8**	**D7**	**D6**	**D5**	**D4**	**D3**	**D2**	**D1**	**D0**
1	↑	1	0	0	0	0	0	PTS 2	PTS 1	PTS 0	0	0	PTG 1	PTG 0	ICS 3	ICS 2	ICS 1	ICS 0
Default value			0	0	0	0	0	0	0	0	0	0	0	0	0	0	0	0

Description

ICS [3:0]: Set the scan cycle when PTG [1:0] selects interval scan in non-display area drive period. The scan cycle is defined by n frame periods, where n is an odd number from 0 to 29. The polarity of liquid crystal drive voltage from the gate driver is inverted in the same timing as the interval scan cycle.

ICS[3:0]	Scan Cycle	$f_{FLM} = 60Hz$
0000	0 frame	-
0001	1 frame	17ms
0010	3 frame	50ms
0011	5 frame	84ms
0100	7 frame	117ms
0101	9 frame	150ms
0110	11 frame	184ms
0111	13 frame	217ms
1000	15 frame	251ms
1001	17 frame	284ms
1010	19 frame	317ms
1011	21 frame	351ms
1100	23 frame	384ms
1101	25 frame	418ms
1110	27 frame	451ms
1111	29 frame	484ms

PTG [1:0]: Sets the scan mode in non-display area. The scan mode selected by PTG [1:0] bits is applied in the non-display area when the base image is turned off and the non-display area other than the first and second partial display areas.

PTG[1:0]	Gate Output in Non-Display Area	Source Output in Non-Display Area	VCOM Output
00	Normal Scan	Set with the PTS[2:0]	VCOMH/VCOML
01	Setting Prohibited	-	-
10	Interval Scan	Set with the PTS[2:0]	VCOMH/VCOML
11	Setting Prohibited	0	-

PTS [2:0]: Sets the source output level in non-display area drive period. When PTS[2] = 1, the operation of amplifiers which generates the grayscales other than V0 and V63 are halted and the step-up clock frequency becomes half the normal frequency in non-display drive period in order to reduce power consumption.

PTS[2:0]	Source Output Level		Grayscale Amplifier in Operation	Step-Up Clock Frequency
	Positive Polarity	Negative Polarity		
000	V63	V0	V63 to V0	Register Setting (DC1,DC0)
001	Setting inhibited	Setting inhibited	-	-
010	GND	GND	V63 to V0	Register Setting(DC1,DC0)
011	Hi-Z	Hi-Z	V63 to V0	Register Setting(DC1,DC0)
100	V63	V0	V63 and V0	Frequency setting by(DC1,DC0)
101	Setting inhibited	Setting inhibited	-	-
110	GND	GND	V63 and V0	Frequency setting by(DC1,DC0)
111	Hi-Z	Hi-Z	V63 and V0	Frequency setting by (DC1,DC0)

Note1: The power efficiency improved by halting grayscale amplifiers and slowing down the step-up clock frequency can be obtained in non-display drive period.

	Note2: The gate output level in non-display drive period is controlled by the PTG setting (off-scan mode).

11.1.10 Display Control 4 (R0Ah)

Display Control 4 (R0Ah)																		
RS	**/WR**	**/RD**	**D15**	**D14**	**D13**	**D12**	**D11**	**D10**	**D9**	**D8**	**D7**	**D6**	**D5**	**D4**	**D3**	**D2**	**D1**	**D0**
1	↑	1	0	0	0	0	0	0	0	0	0	0	0	0	FMARKOE	FMI2	FMI1	FMI0
Default value			0	0	0	0	0	0	0	0	0	0	0	0	0	0	0	0

Description

FMARKOE: When FMARKOE = 1, the ST7781 starts outputting FMARK signal from the FMARK pin in the output interval set by FMI[2:0] bits

FMI [2:0]: Sets the output interval of FMARK signal according to the display data rewrite cycle and data transfer rate.

FMI[2:0]	Output Interval
000	1 Frame
001	2 Frame
011	4 Frame
101	6 Frame
Others	Setting Prohibited

11.1.11 Frame Marker Position (R0Dh)

Frame Marker Position (R0Dh)																		
RS	**/WR**	**/RD**	**D15**	**D14**	**D13**	**D12**	**D11**	**D10**	**D9**	**D8**	**D7**	**D6**	**D5**	**D4**	**D3**	**D2**	**D1**	**D0**
1	↑	1	0	0	0	0	0	0	0	FMP8	FMP7	FMP6	FMP5	FMP4	FMP3	FMP2	FMP1	FMP0
Default value			0	0	0	0	0	0	0	0	0	0	0	0	0	0	0	0

Description

FMP [8:0]: Sets the output position of frame cycle signal (frame marker). When FMP[8:0] = 9'h000, a high-active pulse FMARK is output at the start of back porch period for 1H period. FMARK can be used as the trigger signal for frame synchronous write operation.

FMP[8:0]	FMARK Output Position
9'h000	0th line
9'h001	1st line
9'h002	2nd line
9'h003	3rd line
. . .	. . .
9'h174	372th line
9'h175	373th line
9'h176	374th line
9'h177	375th line

11.1.12 Power Control 1 (R10h)

Power Control 1 (R10h)																		
RS	**/WR**	**/RD**	**D15**	**D14**	**D13**	**D12**	**D11**	**D10**	**D9**	**D8**	**D7**	**D6**	**D5**	**D4**	**D3**	**D2**	**D1**	**D0**
1	↑	1	0	0	0	SAP	0	BT2	BT1	BT0	APE	AP2	AP1	AP0	0	0	STB	0
Default value			0	0	0	0	0	0	0	0	0	0	0	0	0	0	0	0

Description

SAP: Source Driver output control
SAP="0", Source driver is disabled.
SAP="1", Source driver is enabled.
When starting the charge-pump of LCD in the Power ON stage, make sure that SAP="0", and set the SAP="1", after starting up the LCD power supply circuit.

BT [2:0]: Sets the factor used in the step-up circuits.
Select the optimal step-up factor for the operating voltage. To reduce power consumption, set a smaller factor.

BT[2:0]	AVDD	VCL	VGH	VGL
0	Vci1X2	-Vci1	Vci1X6	-Vci1X5
1	Vci1X2	-Vci1		-Vci1X4
2				-Vci1X3
3	Vci1X2	-Vci1	Vci1X5	-Vci1X5
4				-Vci1X4
5				-Vci1X3
6	Vci1X2	-Vci1	Vci1X4	-Vci1X4
7				-Vci1X3

Note1: Connect capacitors to the capacitor connection pins when generating AVDD, VGH, VGL and VCL levels.
Note2: Make sure AVDD = 6.0V (max.), VGH = 15.0V (max.), VGL = – 12.5V (max) and VCL= -3.0V (max.)

APE: Power supply enable bit. Set APE = "1" to start generation of power supply according to the power supply startup sequence.

AP [2:0]: Adjusts the constant current in the operational amplifier circuit in the LCD power supply circuit. The larger constant current enhances the drivability of the LCD, but it also increases the current consumption. Adjust the constant current taking the trade-off into account between the display quality and the current consumption. In no-display period, set AP[2:0]= "000" to halt the operational amplifier circuits and the step-up circuits to reduce current consumption.

AP[2:0]	Gamma Driver Amplifier	Source Driver Amplifier
000	Halt	Halt
001	1.5	1.5
010	1.25	1.25
011	1.00	1.00
100	0.75	0.75
101	0.5	0.5
110	0.25	0.25
111	Setting Prohibited	Setting Prohibited

STB: When STB = "1", ST7781 enters the standby mode and the display operation stops except the DRAM power supply to reduce the power consumption. No change to the DRAM data and instruction setting is accepted and he DRAM data and the instruction setting are maintained in STB mode.

11.1.13 Power Control 2 (R11h)

Power Control 2 (R11h)																		
RS	**/WR**	**/RD**	**D15**	**D14**	**D13**	**D12**	**D11**	**D10**	**D9**	**D8**	**D7**	**D6**	**D5**	**D4**	**D3**	**D2**	**D1**	**D0**
1	↑	1	0	0	0	0	0	DC12	DC11	DC10	0	DC02	DC01	DC00	0	VC2	VC1	VC0
Default value			0	0	0	0	0	1	1	1	0	1	1	1	0	0	0	0

Description

DC0 [2:0]: Selects the operating frequency of the step-up circuit 1. The higher step-up operating frequency enhances the drivability of the step-up circuit and the quality of display but increases the current consumption. Adjust the frequency taking the trade-off between the display quality and the current consumption into account.

DC1 [2:0]: Selects the operating frequency of the step-up circuit 2. The higher step-up operating frequency enhances the drivability of the step-up circuit and the quality of display but increases the current consumption. Adjust the frequency taking the trade-off between the display quality and the current consumption into account.

DC0[2:0]	Step-Up Circuit 1 Step-Up Frequency (f_{DCDC1})	DC1[2:0]	Step-Up Circuit 2 Step-Up Frequency (f_{DCDC2})
000	Fosc/4	000	Fosc/8
001	Fosc/8	001	Fosc/16
010	Fosc/16	010	Fosc/32
011	Fosc/32	011	Fosc/64
100	Fosc/64	100	Fosc/128
101	Fosc/128	101	Fosc/256
110	Fosc/256	110	Fosc/512
111	Halt step-up circuit 1	111	Halt step-up circuit 2

Note: Be sure $f_{DCD1} \geq f_{DCDC2}$ *when setting DC0[2:0] and DC1[2:0]*

VC [2:0] Sets the ratio factor of VDD to generate the reference voltages Vci1.

VC[2:0]	Vci1 voltage
000	0.95 X VDD
001	0.90 X VDD
010	0.85 X VDD
011	0.80 X VDD
100	0.75 X VDD
101	0.70 X VDD
110	Disable
111	1.0 X VDD

11.1.14 Power Control 3 (R12h)

Power Control 3 (R12h)																		
RS	**/WR**	**/RD**	**D15**	**D14**	**D13**	**D12**	**D11**	**D10**	**D9**	**D8**	**D7**	**D6**	**D5**	**D4**	**D3**	**D2**	**D1**	**D0**
1	↑	1	0	0	0	0	0	0	0	0	VCIRE	0	0	0	VRH3	VRH2	VRH1	VRH0
Default value			0	0	0	0	0	0	0	0	1	0	0	0	0	0	0	0

Description	**VCIRE**: Select the external reference voltage VDD or internal reference voltage VCIR. When VCIRE="0" using external reference voltage When VCIRE="1" using internal reference voltage 2.5V **VRH [3:0]:**Set the amplifying rate (1.6 ~ 2.4) of VDD applied to output the GVDD level, which is a reference level for the VCOM level and the grayscale voltage level.

VCIRE=0		VCIRE=1	
VRH[3:0]	**GVDD**	**VRH[3:0]**	**GVDD**
0000	Halt	0000	Halt
0001	VDDX 2.00	0001	2.5V X 2
0010	VDDX 2.05	0010	2.5V X 2.05
0011	VDDX 2.10	0011	2.5V X 2.1
0100	VDDX 2.20	0100	2.5V X 2.2
0101	VDDX 2.30	0101	2.5V X 2.3
0110	VDDX 2.40	0110	2.5V X 2.4
0111	VDDX 2.40	0111	2.5V X 2.4
1000	VDDX 1.60	1000	2.5V X 1.6
1001	VDDX 1.65	1001	2.5V X1.65
1010	VDDX 1.70	1010	2.5V X 1.7
1011	VDDX 1.75	1011	2.5V X 1.75
1100	VDDX 1.80	1100	2.5V X 1.8
1101	VDDX 1.85	1101	2.5V X 1.85
1110	VDDX 1.90	1110	2.5V X 1.9
1111	VDDX 1.95	1111	2.5V X 1.95

Note1: When VDD<2.5V, internal reference voltage will be same as VCI.
Note2: Make sure VDD >= 2.6V, when using VCIRE =1.
Note3: Make sure that VC and VRH setting restriction: GVDD <=(AVDD-0.5)V

11.1.15 Power Control 4 (R13h)

Power Control 4 (R13h)																		
RS	**/WR**	**/RD**	**D15**	**D14**	**D13**	**D12**	**D11**	**D10**	**D9**	**D8**	**D7**	**D6**	**D5**	**D4**	**D3**	**D2**	**D1**	**D0**
1	↑	1	0	0	0	VDV4	VDV3	VDV2	VDV1	VDV0	0	0	0	0	0	0	0	0
Default value			0	0	0	0	0	1	1	1	0	1	1	1	0	0	0	0

Description

VDV [4:0]: Selects the factor of GVDD to set the amplitude of VCOM alternating voltage from 0.70 to 1.24.

VDV[4:0]	VCOM Amplitude	VDV[4:0]	VCOM Amplitude
00000	GVDD X 0.70	10000	GVDD X 1.02
00001	GVDD X 0.72	10001	GVDD X 1.04
00010	GVDD X 0.74	10010	GVDD X 1.06
00011	GVDD X 0.76	10011	GVDD X 1.08
00100	GVDD X 0.78	10100	GVDD X 1.10
00101	GVDD X 0.80	10101	GVDD X 1.12
00110	GVDD X 0.82	10110	GVDD X 1.14
00111	GVDD X 0.84	10111	GVDD X 1.16
01000	GVDD X 0.86	11000	GVDD X 1.18
01001	GVDD X 0.88	11001	GVDD X 1.20
01010	GVDD X 0.90	11010	GVDD X 1.22
01011	GVDD X 0.92	11011	GVDD X 1.24
01100	GVDD X 0.94	11100	GVDD X 1.24
01101	GVDD X 0.96	11101	GVDD X 1.24
01110	GVDD X 0.98	11110	GVDD X 1.24
01111	GVDD X 1.00	11111	GVDD X 1.24

Note :Set VDV[4:0] to let VCOM amplitude less than 6V

11.1.16 DRAM Horizontal/Vertical Address Set (R20h, R21h)

DRAM Horizontal/Vertical Address Set (R20h,R21h)																		
RS	**/WR**	**/RD**	**D15**	**D14**	**D13**	**D12**	**D11**	**D10**	**D9**	**D8**	**D7**	**D6**	**D5**	**D4**	**D3**	**D2**	**D1**	**D0**
1	↑	1	0	0	0	0	0	0	0	0	AD7	AD6	AD5	AD4	AD3	AD2	AD1	AD0
Default value			0	0	0	0	0	0	0	0	0	0	0	0	0	0	0	0
1	↑	1	0	0	0	0	0	0	0	AD16	AD15	AD14	AD13	AD12	AD11	AD10	AD9	AD8
Default value			0	0	0	0	0	0	0	0	0	0	0	0	0	0	0	0

Description

AD [16:0]: A DRAM address set initially in the AC (Address Counter). The address in the AC is automatically updated according to the combination of AM, I/D[1:0] settings as the ST7781 writes data to the internal DRAM so that data can be written consecutively without resetting the address in the AC.

AD[16:0]	DRAM Data Map
17'h00000~17'h000EF	1st line DRAM Data
17'h00100~17'h001EF	2nd line DRAM Data
17'h00200~17'h002EF	3rd line DRAM Data
17'h00300~17'h003EF	4th line DRAM Data
. . .	. . .
17'h13D00~17'h13DEF	318th line DRAM Data
17'h13E00~17'h13EEF	319th line DRAM Data
17'h13F00~17'h13FFE	320n line DRAM Data

11.1.17 Write Data to DRAM (R22h)

Write Data to DRAM (R22h)																		
RS	**/WR**	**/RD**	**D15**	**D14**	**D13**	**D12**	**D11**	**D10**	**D9**	**D8**	**D7**	**D6**	**D5**	**D4**	**D3**	**D2**	**D1**	**D0**
1	↑	1	WD [17:0] - DRAM Write Data															

Description	**WD [17:0]**: The ST7781 develops data into 18 bits internally in write operation. The format to develop data into 18 bits is different in different interface operation. The DRAM data represents the grayscale level. The DRAM data represents the grayscale level. ST7783 automatically updates the address to the begin point according to AM and I/D[1:0] settings as it's wrote this register. The DFM bit sets the format to develop 16-bit data into the 18-bit data in 16-bit or 8-bit interface operation.

11.1.18 Read Data from DRAM (R22h)

Read Data from DRAM (R22h)																		
RS	**/WR**	**/RD**	**D15**	**D14**	**D13**	**D12**	**D11**	**D10**	**D9**	**D8**	**D7**	**D6**	**D5**	**D4**	**D3**	**D2**	**D1**	**D0**
1	1	↑	RD [17:0] - DRAM Read Data															

Description

RD [17:0]: 18-bit data read from the DRAM. RAM read data RD [17:0] is transferred via different data bus in different interface operation. When the ST7781 reads data from the DRAM to the microcomputer, the first word read immediately after RAM address set is executed is taken in the internal read-data latch and invalid data is sent to the data bus. Valid data is sent to the data bus when the ST7781 reads out the second and subsequent words. When either 8-bit or 16-bit interface is selected, the LSBs of R and B dot data are not read out.

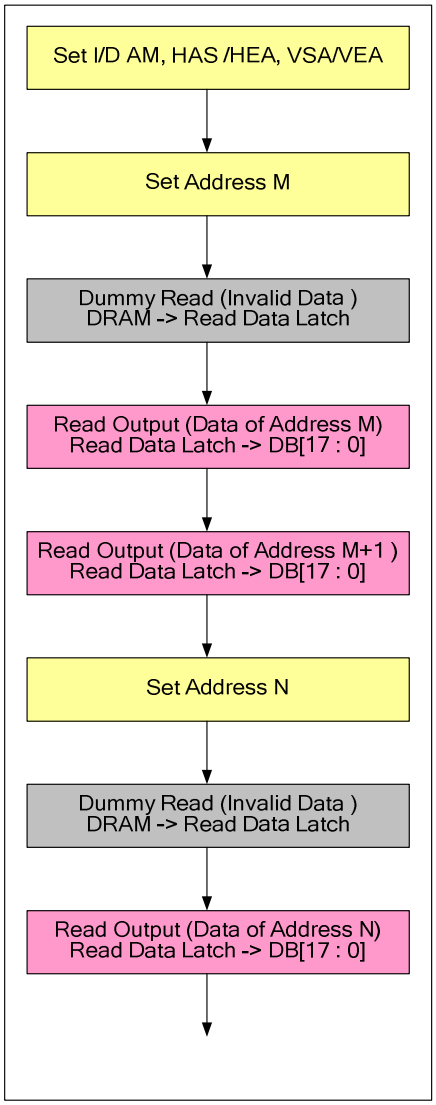

The ST7781 also support function that automatically updates the address according to AM and I/D[1:0] settings as it read data continuously address in the DRAM

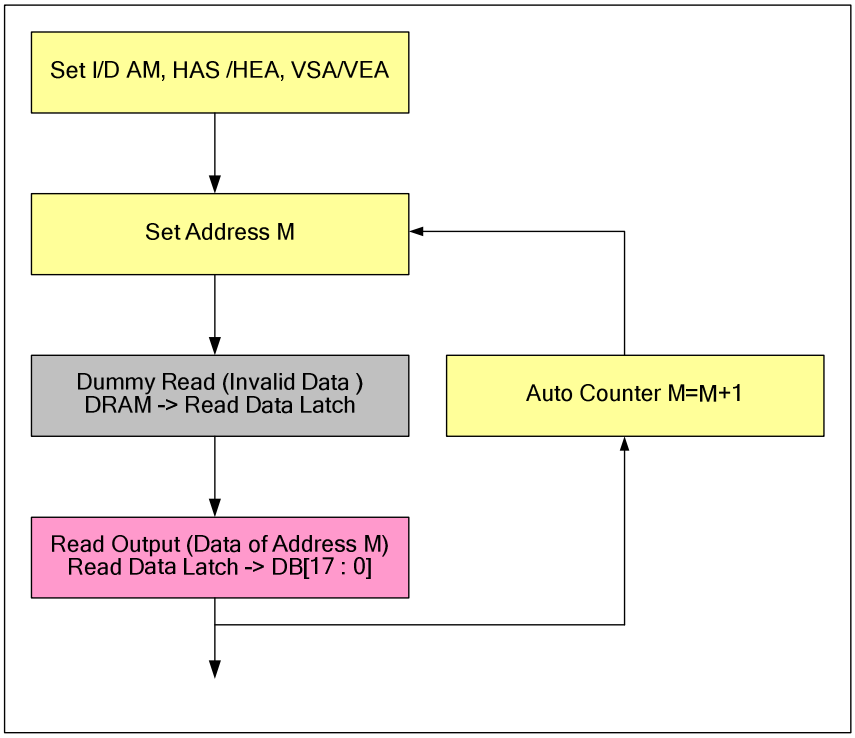

11.1.19 VCOMH Control (R29h)

VCOMH Control (R29h)																		
RS	**/WR**	**/RD**	**D15**	**D14**	**D13**	**D12**	**D11**	**D10**	**D9**	**D8**	**D7**	**D6**	**D5**	**D4**	**D3**	**D2**	**D1**	**D0**
1	↑	1	0	0	0	0	0	0	0	0	0	0	VCM5	VCM4	VCM3	VCM2	VCM1	VCM0
Default value			0	0	0	0	0	0	0	0	0	0	0	0	0	0	0	0

Description

VCM [5:0]: Sets a factor of GVDD from 0.685 to 1.00 to generate the VCOMH voltage (Higher level of VCOM alternating voltage). VCOMH voltage can be set either by internal electronic volume or external resistor. Set the VCMR bit to select either external resistor or internal electronic volume for VCOMH adjustment.

VCM[5:0]	VCOMH	VCM[5:0]	VCOMH
000000	GVDD X 0.685	100000	GVDD X 0.845
000001	GVDD X 0.690	100001	GVDD X 0.850
000010	GVDD X 0.695	100010	GVDD X0.855
000011	GVDD X 0.700	100011	GVDD X 0.860
000100	GVDD X 0.705	100100	GVDD X 0.865
000101	GVDD X 0.710	100101	GVDD X0.870
000110	GVDD X 0.715	100110	GVDD X0.875
000111	GVDD X 0.720	100111	GVDD X 0.880
001000	GVDD X 0.725	101000	GVDD X 0.885
001001	GVDD X 0.730	101001	GVDD X0.890
001010	GVDD X 0.735	101010	GVDD X 0.895
001011	GVDD X 0.740	101011	GVDD X 0.900
001100	GVDD X 0.745	101100	GVDD X0.905
001101	GVDD X 0.750	101101	GVDD X 0.910
001110	GVDD X 0.755	101110	GVDD X 0.915
001111	GVDD X 0.760	101111	GVDD X0.920
010000	GVDD X 0.765	110000	GVDD X 0.925
010001	GVDD X 0.770	110001	GVDD X 0.930
010010	GVDD X 0.775	110010	GVDD X 0.935
010011	GVDD X 0.780	110011	GVDD X 0.940
010100	GVDD X 0.785	110100	GVDD X 0.945
010101	GVDD X0.790	110101	GVDD X 0.950

010110	GVDD X 0.795	110110	GVDD X 0.955
010111	GVDD X 0.800	110111	GVDD X 0.960
011000	GVDD X0.805	111000	GVDD X 0.965
011001	GVDD X0.810	111001	GVDD X 0.970
011010	GVDD X 0.815	111010	GVDD X 0.975
011011	GVDD X 0.820	111011	GVDD X 0.980
011100	GVDD X0.825	111100	GVDD X 0.985
011101	GVDD X 0.830	111101	GVDD X 0.990
011110	GVDD X 0.835	111110	GVDD X 0.995
011111	GVDD X0.840	111111	GVDD X 1.000

11.1.20 Frame Rate and Color Control (R2Bh)

Frame Rate and Color Control (R2Bh)																		
RS	**/WR**	**/RD**	**D15**	**D14**	**D13**	**D12**	**D11**	**D10**	**D9**	**D8**	**D7**	**D6**	**D5**	**D4**	**D3**	**D2**	**D1**	**D0**
1	↑	1	0	0	0	0	0	0	0	0	0	0	0	0	FRS3	FRS2	FRS1	FRS0
Default value			0	0	0	0	0	0	0	0	0	0	0	0	1	0	0	0

Description

FRS[3:0] :Set the frame rate when the internal resistor is used for oscillator circuit.

FRS[3:0]	Frame Rate
0000	27.5
0001	29.3
0010	33
0011	36.7
0100	40.3
0101	44
0110	47.7
0111	51.3
1000	55
1001	64.2
1010	73.3
1011	82.5
1100	91.7
1101	100.8
1110	110
1111	114.1

11.1.21 Gamma Control (R30h~R3Dh)

Gamma Control (R30h~R3Dh)																			
R30h	**RS**	**/WR**	**/RD**	**D15**	**D14**	**D13**	**D12**	**D11**	**D10**	**D9**	**D8**	**D7**	**D6**	**D5**	**D4**	**D3**	**D2**	**D1**	**D0**
	1	↑	1	0	0	0	0	0	KP1[2]	KP1[1]	KP1[0]	0	0	0	0	0	KP0[2]	KP0[1]	KP0[0]
Default value				0	0	0	0	0	0	0	0	0	0	0	0	0	0	0	0
R31h	1	↑	1	0	0	0	0	0	KP3[2]	KP3[1]	KP3[0]	0	0	0	0	0	KP2[2]	KP2[1]	KP2[0]
Default value				0	0	0	0	0	0	0	0	0	0	0	0	0	0	0	0
R32h	1	↑	1	0	0	0	0	0	KP5[2]	KP5[1]	KP5[0]	0	0	0	0	0	KP4[2]	KP4[1]	KP4[0]
Default value				0	0	0	0	0	0	0	0	0	0	0	0	0	0	0	0
R35h	1	↑	1	0	0	0	0	0	RP1[2]	RP1[1]	RP1[0]	0	0	0	0	0	RP0[2]	RP0[1]	RP0[0]
Default value				0	0	0	0	0	0	0	0	0	0	0	0	0	0	0	0
R36h	1	↑	1	0	0	0	VRP1[4]	VRP1[3]	VRP1[2]	VRP1[1]	VRP1[0]	0	0	0	0	VRP0[3]	VRP0[2]	VRP0[1]	VRP0[0]
Default value				0	0	0	0	0	0	0	0	0	0	0	0	0	0	0	0
R37h	1	↑	1	0	0	0	0	0	KN1[2]	KN1[1]	KN1[0]	0	0	0	0	0	KN0[2]	KN0[1]	KN0[0]
Default value				0	0	0	0	0	0	0	0	0	0	0	0	0	0	0	0
R38h	1	↑	1	0	0	0	0	0	KN3[2]	KN3[1]	KN3[0]	0	0	0	0	0	KN2[2]	KN2[1]	KN2[0]
Default value				0	0	0	0	0	0	0	0	0	0	0	0	0	0	0	0
R39h	1	↑	1	0	0	0	0	0	KN5[2]	KN5[1]	KN5[0]	0	0	0	0	0	KN4[2]	KN4[1]	KN4[0]
Default value				0	0	0	0	0	0	0	0	0	0	0	0	0	0	0	0
R3Ch	1	↑	1	0	0	0	0	0	RN1[2]	RN1[1]	RN1[0]	0	0	0	0	0	RN0[2]	RN0[1]	RN0[0]
Default value				0	0	0	0	0	0	0	0	0	0	0	0	0	0	0	0
R3Dh	1	↑	1	0	0	0	VRN1[4]	VRN1[3]	VRN1[2]	VRN1[1]	VRN1[0]	0	0	0	0	VRN0[3]	VRN0[2]	VRN0[1]	VRN0[0]
Default value				0	0	0	0	0	0	0	0	0	0	0	0	0	0	0	0

Description	KP5-0[2:0]: γfine Adjustment Register for Positive Polarity. RP1-0[2:0]: γgradient Adjustment Register for Positive Polarity. VRP1 [4:0]: γamplitude Adjustment Register for Positive Polarity. VRP0 [3:0]: γamplitude Adjustment Register for Positive Polarity. KN5-0[2:0]: γfine Adjustment Register for Negative Polarity. RN1-0[2:0]: γgradient Adjustment Register for Negative Polarity. VRN1 [4:0]: γamplitude Adjustment Register for Negative Polarity. VRN0 [3:0]: γamplitude Adjustment Register for Negative Polarity.

11.1.22 Horizontal and Vertical RAM Address Position (R50h, R51h, R52h, R53h)

Horizontal and Vertical RAM Address Position(R50h,R51h,R52h,R53h)																			
R50h	**RS**	**/WR**	**/RD**	**D15**	**D14**	**D13**	**D12**	**D11**	**D10**	**D9**	**D8**	**D7**	**D6**	**D5**	**D4**	**D3**	**D2**	**D1**	**D0**
	1	↑	1	0	0	0	0	0	0	0	0	HSA7	HSA6	HSA5	HSA4	HSA3	HSA2	HSA1	HSA0
Default value				0	0	0	0	0	0	0	0	0	0	0	0	0	0	0	0
R51h	1	↑	1	0	0	0	0	0	0	0	0	HEA7	HEA6	HEA5	HEA4	HEA3	HEA2	HEA1	HEA0
Default value				0	0	0	0	0	0	0	0	1	1	1	0	1	1	1	1
R52h	1	↑	1	0	0	0	0	0	0	0	VSA8	VSA7	VSA6	VSA5	VSA4	VSA3	VSA2	VSA1	VSA0
Default value				0	0	0	0	0	0	0	0	0	0	0	0	0	0	0	0
R53h	1	↑	1	0	0	0	0	0	0	0	VEA8	VEA7	VEA6	VEA5	VEA4	VEA3	VEA2	VEA1	VEA0
Default value				0	0	0	0	0	0	0	1	0	0	1	1	1	1	1	1

Description

HSA [7:0], HEA [7:0] HSA[7:0] and **HEA[7:0]** are the start and end addresses of the window address area in horizontal direction, respectively. HSA [7:0] and HEA [7:0] specify the horizontal range to write data. Set HSA [7:0] and HEA [7:0] before starting RAM write operation. In setting, make sure that 8'h00 ≤ HAS < HEA ≤ 8'hEF

VSA [8:0], VEA [8:0] VSA [8:0] and **VEA [8:0]** are the start and end addresses of the window address area in vertical direction, respectively. VSA [8:0] and VEA [8:0] specify the vertical range to write data. Set VSA [8:0] and VEA [8:0] before starting RAM write operation. In setting, make sure that 9'h000 ≤ VSA < VEA ≤ 9'h13F.

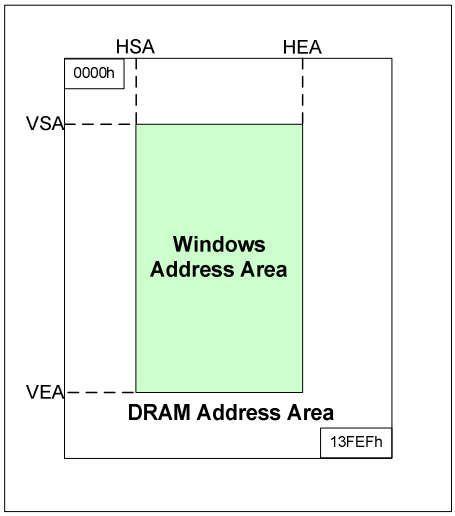

"00"h ≤HSA[7:0] ≤HEA[7:0] ≤"EF"h
"00"h ≤VSA[7:0] ≤VEA[7:0] ≤"13F"h

Note1. The window address range must be within the DRAM address space.
Note2. Data are written to DRAM in four-words when operating in high speed mode, the dummy write operations should be inserted depending on the window address area.

11.1.23 Gate Scan Control (R60h, R61h)

Gate Scan Control (R60h,R61h)																			
R60h	**RS**	**/WR**	**/RD**	**D15**	**D14**	**D13**	**D12**	**D11**	**D10**	**D9**	**D8**	**D7**	**D6**	**D5**	**D4**	**D3**	**D2**	**D1**	**D0**
	1	↑	1	GS	0	NL5	NL4	NL3	NL2	NL1	NL0	0	0	SCN5	SCN4	SCN3	SCN2	SCN1	SCN0
Default value				0	0	0	0	0	0	0	0	0	0	0	0	0	0	0	0
R61h	1	↑	1	0	0	0	0	0	0	0	0	0	0	0	0	0	NDL	0	REV
Default value				0	0	0	0	0	0	0	0	0	0	0	0	0	0	0	0

Description

GS: Sets the direction of scan by the gate driver. Set GS bit in combination with SM and SS bits for the convenience of the display module configuration and the display direction.
When GS=0, the scan direction is from G1 to G320
When GS=1, the scan direction is from G320 to G1

NL [5:0]: Sets the number of lines to drive the LCD at an interval of 8 lines. The DRAM address mapping is not affected by the number of lines set by NL[5:0]. The number of lines must be the same or more than the number of lines necessary for the size of the liquid crystal panel.

NL[5:0]	LCD Drive Line	NL[5:0]	LCD Drive Line
6'h1D	240 lines	6'h23	288 lines
6'h1E	248 lines	6'h24	296 lines
6'h1F	256 lines	6'h25	304 lines
6'h20	264 lines	6'h26	312 lines
6'h21	272 lines	6'h27	320 lines
6'h22	280 lines	Others	Setting inhibited

SCN [5:0]: Specifies the gate line where the gate driver starts scan.

SCN[5:0]	Scanning Start Position			
	SM=0		SM=1	
	GS=0	GS=1	GS=0	GS=1
00h	G1	G320	G1	G320
01h	G9	G312	G17	G304
02h	G17	G304	G33	G288
03h	G25	G296	G49	G272
04h	G33	G288	G65	G265
05h	G41	G280	G81	G240
06h	G49	G272	G97	G224
07h	G57	G264	G113	G208
08h	G65	G256	G129	G192
09h	G73	G248	G145	G176
0Ah	G81	G240	G161	G160
0Bh	G89	G232	G177	G144
0Ch	G97	G224	G193	G128
0Dh	G105	G216	G209	G112
0Eh	G113	G208	G2	G96
0Fh	G121	G200	G18	G80
10h	G129	G192	G34	G64
11h	G137	G184	G50	G48
12h	G145	G176	G66	G32
13h	G153	G168	G82	G16
14h	G161	G152	G114	G303
15h	G169	G152	G114	G303
16h	G177	G144	G130	G287
17h	G185	G136	G146	G271
18h	G193	G128	G162	G255
19h	G201	G120	G178	G239
1Ah	G209	G112	G194	G223
1Bh	G217	G104	G114	G207
1Ch	G225	G96	G130	G191
1Dh	G233	G88	G146	G175
1Eh	G241	G80	G162	G159
1Fh	G249	G72	G178	G143
20h	G257	G64	G194	G127
21h	G265	G56	G210	G111
22h	G273	G48	G226	G95
23h	G281	G40	G242	G79
24h	G289	G32	G258	G63
25h	G297	G24	G274	G47
26h	G305	G16	G290	G31
27h	G313	G8	G30	G15
28h ~ 3Fh	Setting disabled	Setting disabled	Setting disabled	Setting disabled

NDL: Sets the source output level in non display area. NDL bit can keep the non-display area lit on.

NDL	Non- Display Area	
	Positive Polarity	Negative Polarity
0	V63	V0
1	V0	V63

REV: Enables the grayscale inversion of the image by setting REV = 1. This enables the ST7781 to display the same image from the same set of data whether the liquid crystal panel is normally black or white. The source output level during front, back porch periods and blank periods is determined by register setting (PTS).

REV	DRAM Data	Non- Display Area	
		Positive Polarity	Negative Polarity
0	18'h00000	V63	V0
	. . .	. . .	. . .
	18'h3FFFF	V0	V63
1	18'h00000	V0	V63
	. . .	. . .	. . .
	18'h3FFFF	V63	V0

11.1.24 Partial Image 1 Display Position (R80h)

Partial Image 1 Display Position (R80h)																		
RS	/WR	/RD	D15	D14	D13	D12	D11	D10	D9	D8	D7	D6	D5	D4	D3	D2	D1	D0
1	↑	1	0	0	0	0	0	0	0	PTDP08	PTDP07	PTDP06	PTDP05	PTDP04	PTDP03	PTDP02	PTDP01	PTDP00
Default value			0	0	0	0	0	0	0	0	0	0	0	0	0	0	0	0

Description	**PTDP0 [8:0]**: Sets the display start position of partial image 1. The display areas of the partial images 1 and 2 must not overlap each another.

11.1.25 Partial Image 1 Start/End Address (R81h, R82h)

Partial Image 1 Start/End Address(R81h,R82h)																			
R81h	RS	/WR	/RD	D15	D14	D13	D12	D11	D10	D9	D8	D7	D6	D5	D4	D3	D2	D1	D0
	1	↑	1	0	0	0	0	0	0	0	PTSA08	PTSA07	PTSA06	PTSA05	PTSA04	PTSA03	PTSA02	PTSA01	PTSA00
Default value				0	0	0	0	0	0	0	0	0	0	0	0	0	0	0	0
R82h	1	↑	1	0	0	0	0	0	0	0	PTEA08	PTEA07	PTEA06	PTEA05	PTEA04	PTEA03	PTEA02	PTEA01	PTEA00
Default value				0	0	0	0	0	0	0	0	0	0	0	0	0	0	0	0

Description	**PTSA0 [8:0]** and **PTEA0 [8:0]**: Sets the start line and end line addresses of the RAM area, respectively for the partial image *Note1: Make sure that PTSA0 ≤ PTEA0.*

11.1.26 Partial Image 2 Display Position (R83h)

Partial Image 2 Display Position (R83h)																		
RS	/WR	/RD	D15	D14	D13	D12	D11	D10	D9	D8	D7	D6	D5	D4	D3	D2	D1	D0
1	↑	1	0	0	0	0	0	0	0	PTDP18	PTDP17	PTDP16	PTDP15	PTDP14	PTDP13	PTDP12	PTDP11	PTDP10
Default value			0	0	0	0	0	0	0	0	0	0	0	0	0	0	0	0

Description	**PTDP1 [8:0]**: Sets the display start position of partial image *Note1. The display areas of the partial images 1 and 2 must not overlap each another.*

11.1.27 Partial Image 2 Start / End Address (R84h, R85h)

Partial Image 2 Start/End Address(R84h,R85h)																			
R84h	**RS**	**/WR**	**/RD**	**D15**	**D14**	**D13**	**D12**	**D11**	**D10**	**D9**	**D8**	**D7**	**D6**	**D5**	**D4**	**D3**	**D2**	**D1**	**D0**
	1	↑	1	0	0	0	0	0	0	0	PTSA18	PTSA17	PTSA16	PTSA15	PTSA14	PTSA13	PTSA12	PTSA11	PTSA10
Default value				0	0	0	0	0	0	0	0	0	0	0	0	0	0	0	0
R85h	1	↑	1	0	0	0	0	0	0	0	PTEA18	PTEA17	PTEA1	PTEA15	PTEA14	PTEA13	PTEA12	PTEA11	PTEA10
Default value				0	0	0	0	0	0	0	0	0	0	0	0	0	0	0	0

Description	**PTSA1[8:0]** and **PTEA1[8:0]**: Sets the start line and end line addresses of the DRAM area, respectively for the partial image *Note1: Make sure that PTSA1 ≤ PTEA1.*

11.1.28 Panel Interface Control 1 (R90h)

Panel Interface Control 1 (R90h)																		
RS	**/WR**	**/RD**	**D15**	**D14**	**D13**	**D12**	**D11**	**D10**	**D9**	**D8**	**D7**	**D6**	**D5**	**D4**	**D3**	**D2**	**D1**	**D0**
1	↑	1	0	0	0	0	0	0	DIVI1	DIVI0	0	RTNI6	RTNI5	RTNI4	RTNI3	RTNI2	RTNI1	RTNI0
Default value			0	0	0	0	0	0	0	0	0	1	0	0	0	0	0	0

Description

DIVI [1:0]: Sets the division ratio of the internal clock frequency. The ST7781's internal operation is synchronized with the frequency divided internal clock. When DIVI[1:0] setting is changed, the width of the reference clock for liquid crystal panel control signals is changed. The frame frequency can be adjusted by register setting (RTNI and DIVI bits). When changing the number of lines to drive the liquid crystal panel, adjust the frame frequency too.

DIVI[1:0]	Division Ratio	Internal Operation Clock Frequency
00	1	Fosc/1
01	2	Fosc/2
10	4	Fosc/4
11	8	Fosc/8

RTNI [6:0]: Sets 1H (line) period. This setting is enabled while the ST7781's display operation is synchronized with internal clock.

RTNI[6:0]	Clocks/Line	RTNI[6:0]	Clocks/Line	RTNI[6:0]	Clocks/Line	RTNI[6:0]	Clocks/Line
00h	0 clock	20h	32 clocks	40h	64 clocks	60h	96 clocks
01h	1 clock	21h	33 clocks	41h	65 clocks	61h	97 clocks
02h	2 clocks	22h	34 clocks	42h	66 clocks	62h	98 clocks
03h	3 clocks	23h	35 clocks	43h	67 clocks	63h	99 clocks
04h	4 clocks	24h	36 clocks	44h	68 clocks	64h	100 clocks
05h	5 clocks	25h	37 clocks	45h	69 clocks	65h	101 clocks
06h	6 clocks	26h	38 clocks	46h	70 clocks	66h	102 clocks
07h	7 clocks	27h	39 clocks	47h	71 clocks	67h	103 clocks
08h	8 clocks	28h	40 clocks	48h	72 clocks	68h	104 clocks
09h	9 clocks	29h	41 clocks	49h	73 clocks	69h	105 clocks
0Ah	10 clocks	2Ah	42 clocks	4Ah	74 clocks	6Ah	106 clocks
0Bh	11 clocks	2Bh	43 clocks	4Bh	75 clocks	6Bh	107 clocks
0Ch	12 clocks	2Ch	44 clocks	4Ch	76 clocks	6Ch	108 clocks
0Dh	13 clocks	2Dh	45 clocks	4Dh	77 clocks	6Dh	109 clocks
0Eh	14 clocks	2Eh	46 clocks	4Eh	78 clocks	6Eh	110 clocks
0Fh	15 clocks	2Fh	47 clocks	4Fh	79 clocks	6Fh	111 clocks
10h	16 clocks	30h	48 clocks	50h	80 clocks	70h	112 clocks
11h	17 clocks	31h	49 clocks	51h	81 clocks	71h	113 clocks
12h	18 clocks	32h	50 clocks	52h	82 clocks	72h	114 clocks
13h	19 clocks	33h	51 clocks	53h	83 clocks	73h	115 clocks
14h	20 clocks	34h	52 clocks	54h	84 clocks	74h	116 clocks
15h	21 clocks	35h	53 clocks	55h	85 clocks	75h	117 clocks
16h	22 clocks	36h	54 clocks	56h	86 clocks	76h	118 clocks
17h	23 clocks	37h	55 clocks	57h	87 clocks	77h	119 clocks
18h	24 clocks	38h	56 clocks	58h	88 clocks	78h	120 clocks
19h	25 clocks	39h	57 clocks	59h	89 clocks	79h	121 clocks
1Ah	26 clocks	3Ah	58 clocks	5Ah	90 clocks	7Ah	122 clocks
1Bh	27 clocks	3Bh	59 clocks	5Bh	91 clocks	7Bh	123 clocks
1Ch	28 clocks	3Ch	60 clocks	5Ch	92 clocks	7Ch	124 clocks
1Dh	29 clocks	3Dh	61 clocks	5Dh	93 clocks	7Dh	125 clocks
1Eh	30 clocks	3Eh	62 clocks	5Eh	94 clocks	7Eh	126 clocks
1Fh	31 clocks	3Fh	63 clocks	5Fh	95 clocks	7Fh	127 clocks

11.1.29 Panel Interface Control 2 (R92h)

Panel Interface Control 2 (R92h)																		
RS	**/WR**	**/RD**	**D15**	**D14**	**D13**	**D12**	**D11**	**D10**	**D9**	**D8**	**D7**	**D6**	**D5**	**D4**	**D3**	**D2**	**D1**	**D0**
1	↑	1	0	0	0	0	0	NOWI2	NOWI1	NOWI0	0	0	0	0	0	0	0	0
Default value			0	0	0	0	0	1	1	0	0	0	0	0	0	0	0	0

Description

NOWI [2:0]: Sets the non-overlap period of adjacent gate outputs. The setting is enabled in display operation synchronizing with the internal clock.

NOWI[2:0]	Gate Non-Overlap Period
000	0 clocks
001	1 clocks
010	2 clocks
011	3 clocks
100	4 clocks
101	5 clocks
110	6 clocks
111	7 clocks

Note: The gate output non-overlap period is defined by the number of frequency-divided internal clocks, the frequency of which is determined by instruction (DIVI), from the reference point.

11.1.30 EEPROM ID Code (RD2h)

EEPROM ID Code (RD2h)																		
RS	**/WR**	**/RD**	**D15**	**D14**	**D13**	**D12**	**D11**	**D10**	**D9**	**D8**	**D7**	**D6**	**D5**	**D4**	**D3**	**D2**	**D1**	**D0**
1	↑	1	0	0	0	0	0	0	0	0	0	ID6	ID5	ID4	ID3	ID2	ID1	ID0
Default value			0	0	0	0	0	0	0	0	0	0	0	0	0	0	0	0

Description	**ID [6:0]:** ST7781 supply 7bit ID code for LCD module version ID

11.1.31 EEPROM Control Status (RD9h)

EEPROM Control Status (RD9h)																		
RS	**/WR**	**/RD**	**D15**	**D14**	**D13**	**D12**	**D11**	**D10**	**D9**	**D8**	**D7**	**D6**	**D5**	**D4**	**D3**	**D2**	**D1**	**D0**
1	↑	1	0	0	0	0	0	0	0	0	0	ID_EN	VCM_EN	0	0	0	0	0
Default value			0	0	0	0	0	0	0	0	0	0	0	0	0	0	0	0

Description	**ID_EN**: ”1” = Command EEPROM ID Code (RD2h) Enable. ”0” = Command EEPROM ID Code (RD2h) Disable. **VCM_EN:** ”1” = Command EEPROM VCOM Offset Control (RFEh) Enable. ”0” = Command EEPROM VCOM Offset Control (RFEh) Disable.

11.1.32 EEPROM Read Command (RDEh)

EEPROM Read Command (RDEh)																		
RS	**/WR**	**/RD**	**D15**	**D14**	**D13**	**D12**	**D11**	**D10**	**D9**	**D8**	**D7**	**D6**	**D5**	**D4**	**D3**	**D2**	**D1**	**D0**
1	↑	1	0	0	0	0	0	0	0	0	1	0	1	0	0	1	0	1
Default value			0	0	0	0	0	0	0	0	0	0	0	0	0	0	0	0

Description	EEPROM Read Command.

11.1.33 EEPROM Wite Command (RDFh)

EEPROM Write Command (RDFh)																		
RS	**/WR**	**/RD**	**D15**	**D14**	**D13**	**D12**	**D11**	**D10**	**D9**	**D8**	**D7**	**D6**	**D5**	**D4**	**D3**	**D2**	**D1**	**D0**
1	↑	1	0	0	0	0	0	0	0	0	EE_IB7	EE_IB6	EE_IB5	EE_IB4	EE_IB3	EE_IB2	EE_IB1	EE_IB0
1	↑	1	0	0	0	0	0	0	0	0	EE_CMD7	EE_CMD6	EE_CMD5	EE_CMD4	EE_CMD3	EE_CMD2	EE_CMD1	EE_CMD0
1	↑	1	0	0	0	0	0	0	0	0	1	0	1	0	0	1	0	1

Description	**EE_IB[7:0]**: Write Operation Selection. EE_IB[7:0]=D2h,Write ID Code EE_IB[7:0]=FEh,Write VCOM Offest **EE_CMD[7:0]**: Select to Program/Erase ; Program Command : 3Ah ; Erase Command : C5h

11.1.34 EEPROM Enable (RFAh)

EEPROM Enable (RFAh)																		
RS	**/WR**	**/RD**	**D15**	**D14**	**D13**	**D12**	**D11**	**D10**	**D9**	**D8**	**D7**	**D6**	**D5**	**D4**	**D3**	**D2**	**D1**	**D0**
1	↑	1	0	0	0	0	0	0	0	0	0	0	0	0	0	0	MTPPROG	0
Default value			0	0	0	0	0	0	0	0	0	0	0	0	0	0	0	0

Description	**MTPPROG**:"1" for enable EEPROM function with SW_EE =1

11.1.35 EEPROM VCOM Offset (RFEh)

EEPROM VCOM Offset (RFEh)																		
RS	**/WR**	**/RD**	**D15**	**D14**	**D13**	**D12**	**D11**	**D10**	**D9**	**D8**	**D7**	**D6**	**D5**	**D4**	**D3**	**D2**	**D1**	**D0**
1	↑	1	0	0	0	0	0	0	0	0	0	0	0	VCMF4	VCMF3	VCMF2	VCMF1	VCMF0
Default value			0	0	0	0	0	0	0	0	0	0	0	0	0	0	0	0

Description

VCMF[4:0]: Set VCOMH Voltage level for reduce the flicker issue

VCMF[4:0]	VCOMH Output Level
00000	"VCOMH"
00001	"VCOMH"+1d
00010	"VCOMH"+2d
|	|
01110	"VCOMH"+14d
01111	"VCOMH"+15d
10000	"VCOMH"-16d
10001	"VCOMH"-15d
10010	"VCOMH"-14d
|	|
11110	"VCOMH"-2d
11111	"VCOMH"-1d

Note: 1d=GVDDX0.005, 2d= GVDDX0.01, 3d = GVDDX0.015....
3V <= VCOMH + nd <=5V (n= -16~15)

11.1.36 FAh/FEh Enable (RFFh)

FAh/FEh Enable Enable (RFFh)																		
RS	**/WR**	**/RD**	**D15**	**D14**	**D13**	**D12**	**D11**	**D10**	**D9**	**D8**	**D7**	**D6**	**D5**	**D4**	**D3**	**D2**	**D1**	**D0**
1	↑	1	0	0	0	0	0	0	0	0	0	0	0	0	0	0	0	FXEN
Default value			0	0	0	0	0	0	0	0	0	0	0	0	0	0	0	0

Description	**FXEN**:"1" for enable FAh and FEh function.

12. Reset Function

The ST7781 is initialized by the RESET input. During reset period, the ST7781 is in a busy state and instruction from the MCU and DRAM access are not accepted. The ST7781's internal power supply circuit unit is initialized also by the RESET input. The RESET period must be secured for at least 1ms. In case of power-on reset, wait until the RC oscillation frequency stabilizes (for 1 ms). During this period, DRAM access and initial instruction setting are prohibited.

12.1. Initial State of Instruction Bits (Default)

See the Instruction desscription.The default value is shown in the parenthesis of each instruction bit cell.

12.2. RAM Data Initialization

The RAM data is not automatically initialized by the RESET input. It must be initialized by software in display-off period.

12.3. Note on Reset Function

(1) When a RESET input is entered into the ST7781 while it is in deep standby mode, the ST7781 starts up the inside logic regulator and makes a transition to the initial state. During this period, the state of the interface pins may become unstable. For this reason, do not enter a RESET input in deep standby mode.

(2) When transferring instruction in either two or three transfers via 8-/9-/16-bit interface, make sure to execute data transfer synchronization after reset operation.

12.4 Reset Timing Characterics

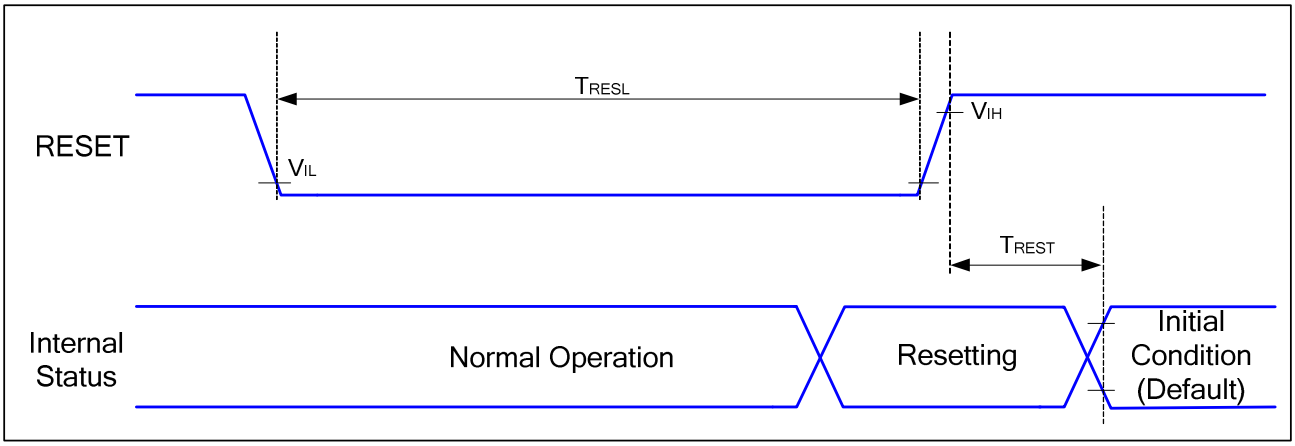

Fig. 12.4 Reset timing

VDDI=1.65 to 3.3V, VDD=2.5 to 3.3V, AGND=DGND=0V, Ta=25℃

Signal	Symbol	Parameter	Min	Max	Unit	Description
RESET	T_{RESL}	Reset Low Level Width	1	-	ms	-
	T_{REST}	Reset Complete Time	1		ms	

Table 12.4.1: Reset timing Characteristics

13. FMARK Function

The ST7781 outputs an FMARK pulse when the ST7781 is driving the line specified by FMP[8:0] bits. The FMARK signal can be used as a trigger signal to write display data in synchronization with display operation by detecting the address where data is read out for display operation.

The FMARK output interval is set by FMI[2:0] bits. Set FMI[2:0] bits in accordance with display datarewrite cycle and data transfer rate. Set FMARKOE = 1 when outputting FMARK pulse from the FMARK pin.

FMI[2:0]	Output Interval
000	1 Frame
001	2 Frame
011	4 Frame
101	6 Frame
Others	Setting Prohibited

Table 13.1: FMARK Interval

FMP[8:0]	FMARK Output Position
9'h000	0 th line
9'h001	1 st line
9'h002	2 nd line
9'h003	3 rd line
. . .	. . .
9'h174	372 th line
9'h175	373 th line
9'h176	374 th line
9'h177	375 th line

Table 13.2: FMARK Output Position

13.1 FMP Setting Example

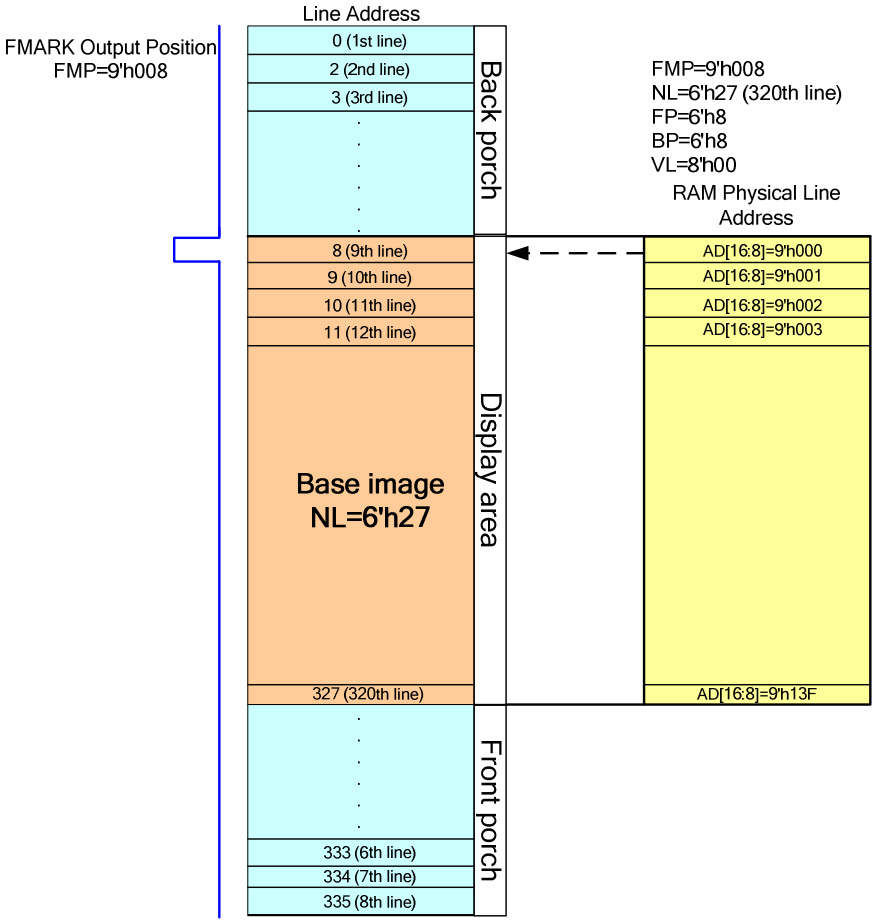

Fig. 13.1.1 FMARK Setting Example

13.2 Display Operation Synchronous Data Transfer using FMARK

The ST7781 uses FMARK signal as a trigger signal to start writing data to the internal DRAM in synchronization with display scan operation.

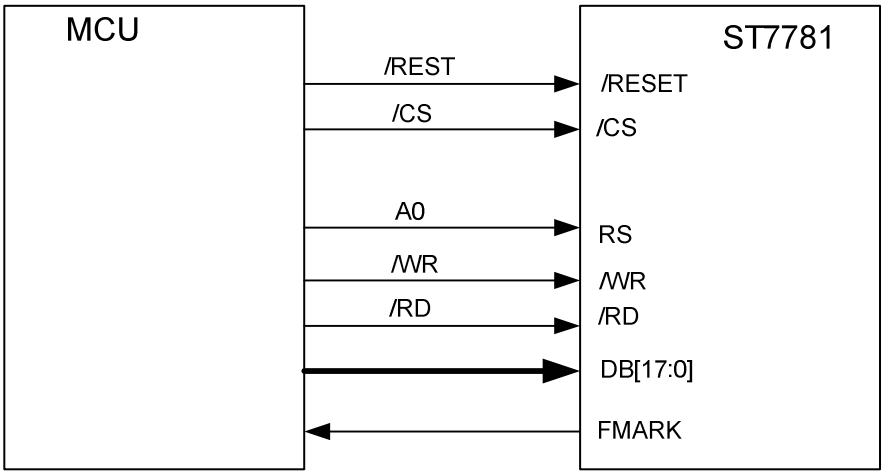

Fig. 13.2.1 Display Synchronous Data Transfer Interface

In this operation, moving picture display is enabled via system interface by writing data at higher than the internal display operation frequency to a certain degree, which guarantees rewriting the moving picture DRAM area without causing flicker on the display. The data is written in the internal RAM in order to transfer only the data written over the moving picture display area and minimize the data transfer required for moving picture display.

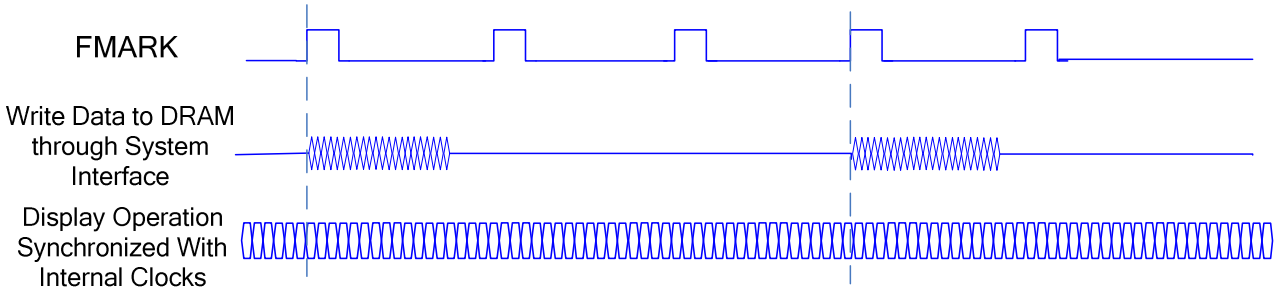

Fig. 13.2.2 Moving Picture Data Transfers via FMARK Function

When transferring data in synchronization with FMARK signal, minimum DRAM data write speed and internal clock frequency must be taken into consideration. They must be more than the values calculated from the following equations.

$$Internal\ \ clock\ \ frequency\ (fosc)[Hz]$$
$$= Frame\ \ Frequency\ (\min.)[Hz] \times (DisplayPor\ \ ch(NL) + FrontPorch\ (FP) + BackPorch\ (BP)) \times 16(clocks) \times \mathrm{var}\ iance$$
$$RAMWriteSp\ \ eed\ (\min.)[Hz] > \frac{240 \times DisplayLin\ \ es(NL)}{(FrontPorch\ (FP) + BackPorch\ (BP) + DisplayLin\ \ es(NL) - m\arg ins) \times 16(clocks) \times \frac{1}{fosc}}$$

Note: When RAM write operation is not started immediately following the rising edge of FMARK, the time from the rising edge of FMARK until the start of RAM write operation must also be taken into account.

Examples of DRAM writes speed and the frequency of the internal clocks are as follows.

Example:

Display size	320 RGB x 240 lines,
Total number of lines (NL)	320 lines
Back/Front porch:	14/2 lines
Frame frequency	60 Hz

Internal Clock Frequency (fosc) [Hz] = 60Hz x (320+2+14) x 16 clocks x 1.1/0.9 = 394 kHz

Note1. When setting the internal clock frequency, possible causes of fluctuation must also be taken into consideration. In this example, the internal clock frequency allows for a margin of ±10% for variances and guarantee that display operation is completed within one FMARK cycle.

Note2. This example includes variances attributed to LSI fabrication process and room temperature. Other possible causes of variances, such as differences in external resistors and voltage change are not considered in this example. It is necessary to include a margin for these factors.

Minimum Speed for DRAM Writing [Hz] > 240x320 / {((14+320-2)lines x 16 clocks) / 394kHz} = 5.7MHz

Note1. In this example, it is assumed that the ST7781 starts writing data in the internal DRAM on the rising edge of FMARK.

Note2. There must be at least a margin of 2 lines between the line to which the ST7781 has just written data and the line where display operation on the LCD is performed.

Note3. The FMARK signal output position is set to the line specified by FMP[8:0] bits.

In this example, DRAM write operation at a speed of 5.67MHz or more, when starting on the rising edge of FMARK, guarantees the completion of data write operation in a certain line address before the ST7781 starts the display operation of the data written in that line and can write moving picture data without causing flicker on the display.

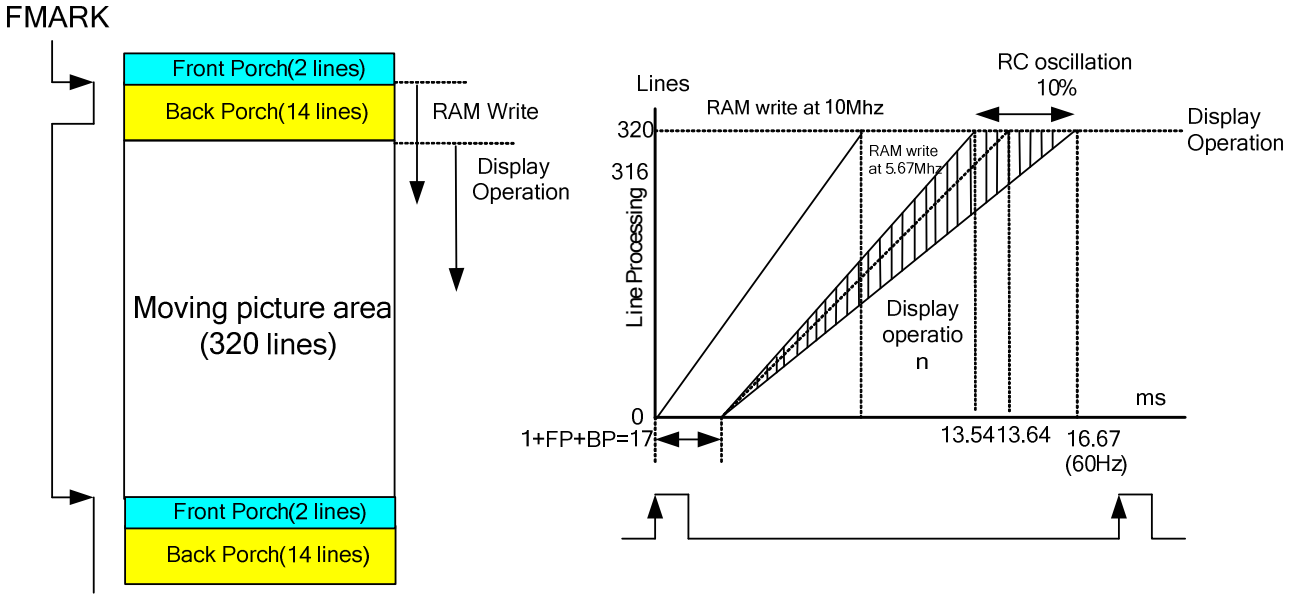

Fig. 13.2.3 Write/Display Operation Timing

14. 8 - Color Display Mode

The ST7781 has a function to display in 8 colors. In this display mode, only V0 and V63 are used and power supplies to other grayscales are turned off to reduce power consumption. In 8-color display mode, the γ-adjustment registers KP5-0[2:0], RP1-0[2:0], VRP0 [3:0], KN5-0[2:0], RN1-0[2:0], VRN1 [4:0], VRN0 [3:0], are disabled and the power supplies to V1 to V62 are halted. The ST7781 does not require DRAM data rewrite for 8-color display by writing the MSB to the rest in each dot data to display in 8 colors.

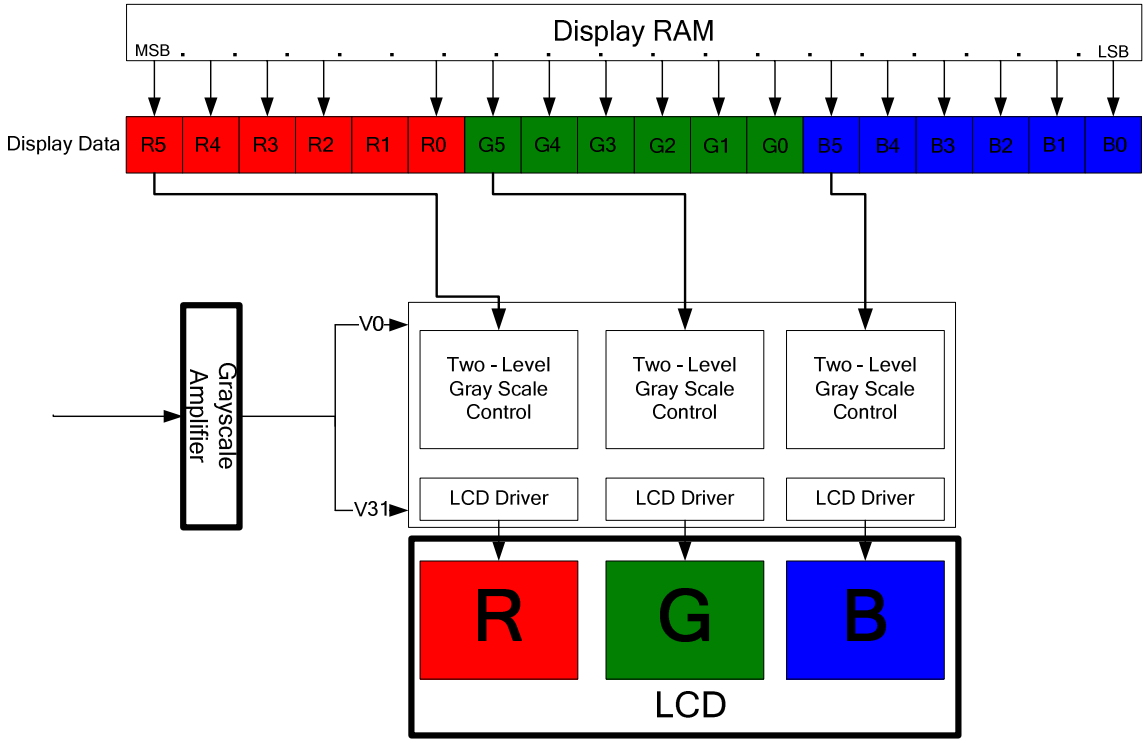

Fig. 14.1 8-Color Display Mode

15. Window Address Function

The window address function enables writing display data consecutively in a rectangular area (a window address area) made on the internal DRAM. The window address area is made by setting the horizontal address register (star: HAS[7:0], end HEA[7:0] bits) and the vertical address register(start: VSA[8:0], end: VEA[8:0] bits) The AM bits sets the transition direction of RAM address(either increment or decrement). These bits enable the ST7781 to write data including image data consecutively not taking data wrap positions into account.
The window address area must be made within the GRAN address map area. Also, DRAM address bits (RAM address set register) must be an address within the window address area.

[Window address setting area]

(Horizontal direction) 00H ≦ HSA[7:0] ≦ HEA[7:0] ≦ ”EF”H

(Vertical direction) 00H ≦VSA[8:0] ≦ VEA[8:0] ≦ ”13F”H

[RAM address, AD (an address within a window address area)]

(RAM address) HSA[7:0] ≦AD[7:0] ≦HEA[7:0]

VSA[8:0] ≦AD[15:8] ≦VEA[8:0]

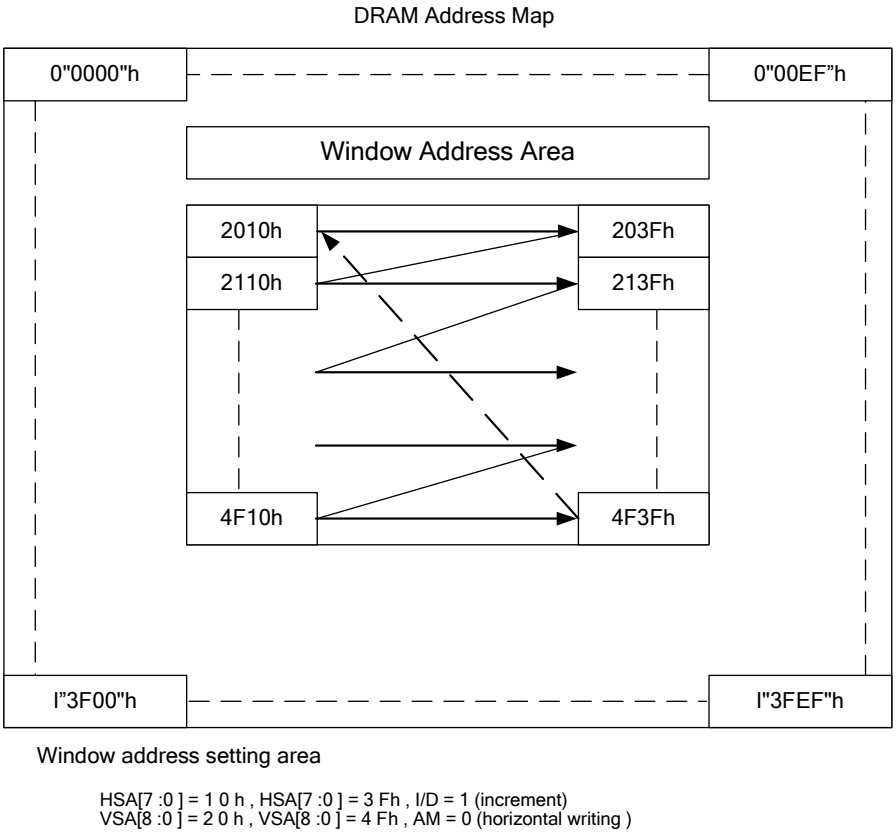

Fig.15.1 DRAM Access Window Map

16. Gamma Correction

ST7781 incorporate the γ- correction function to display 262,244 colors for the LCD panel. Theγ-correction is performed with 3 groups of registers determining eight reference grayscale levels, which are gradient adjustment, amplitude adjustment and fine- adjustment registers for positive and negative polarities, to make ST7781 available with liquid crystal panels of various characteristics.

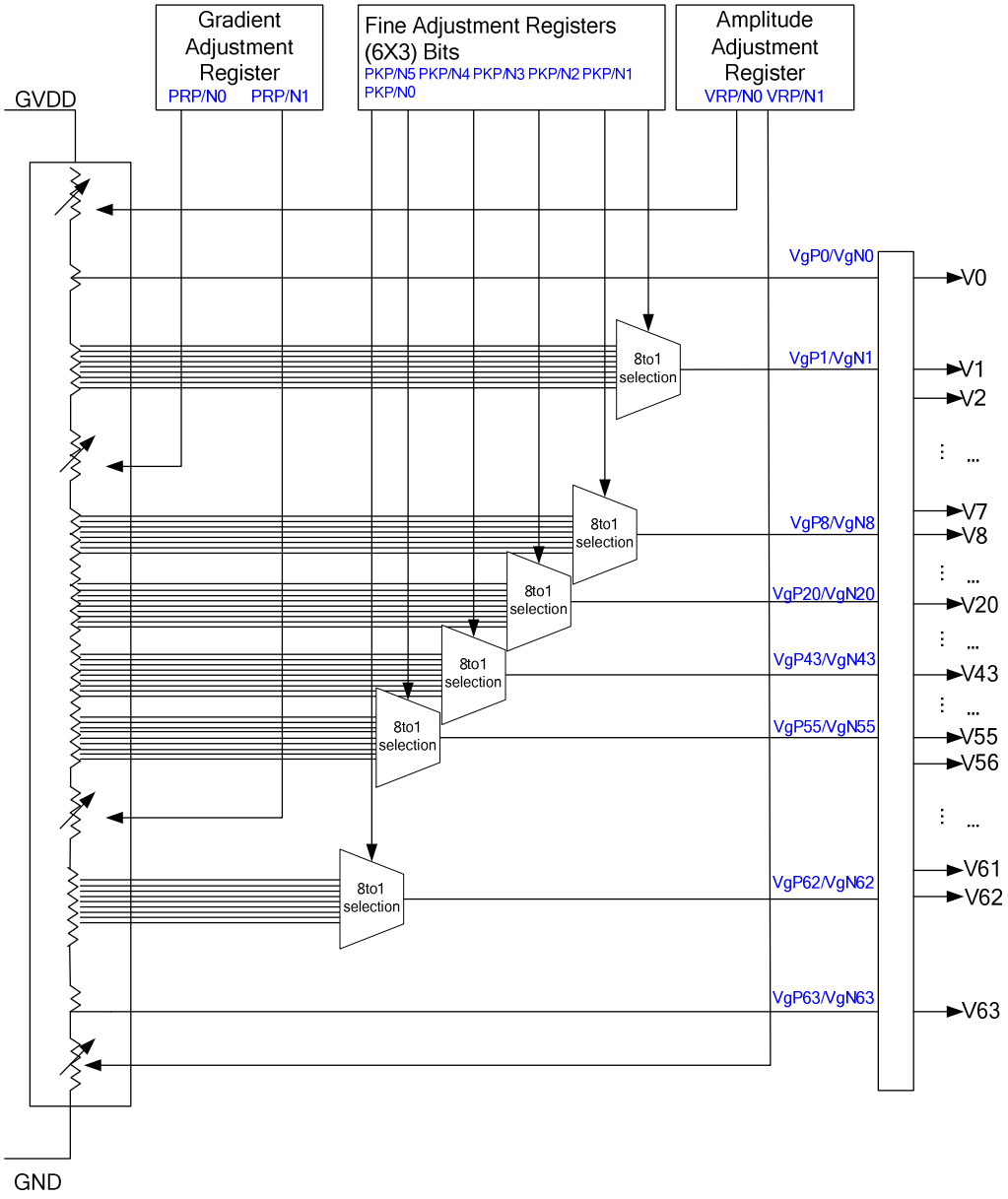

Fig.16.1 Grayscale Voltage Generation

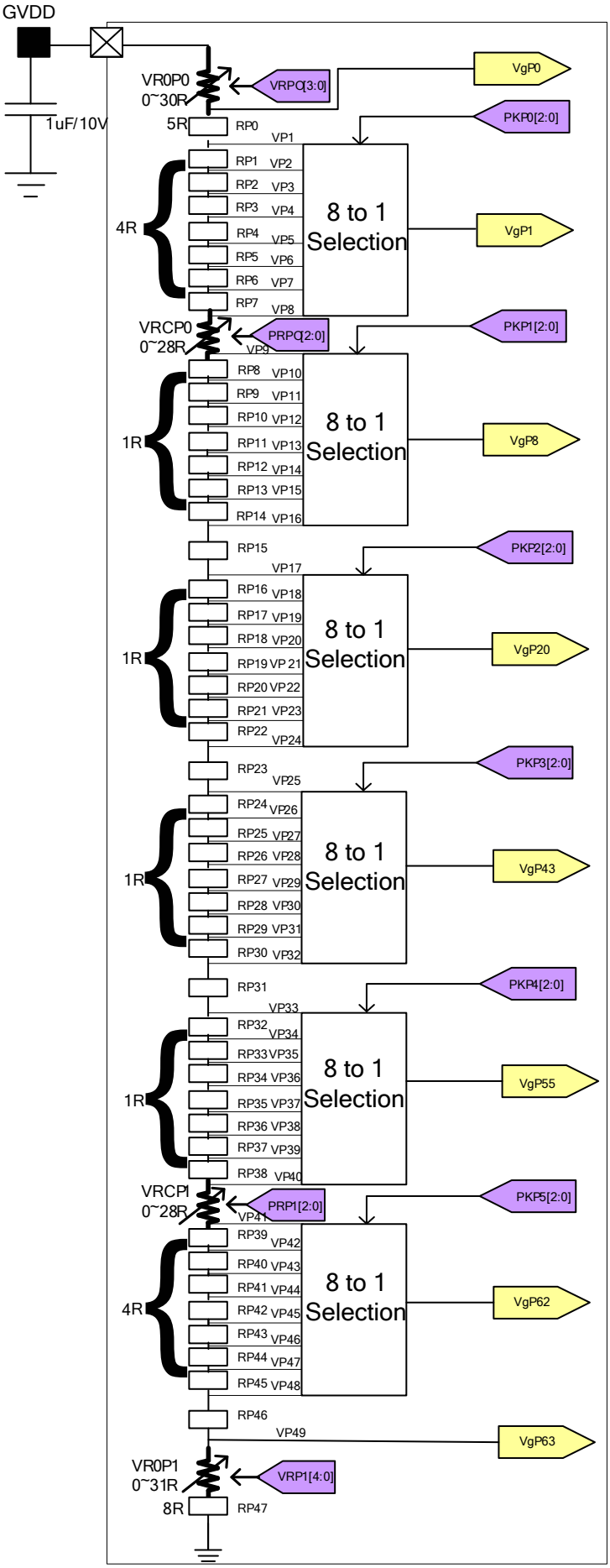

Fig.16.2 Grayscale Voltage Adjustment

1. Gradient Adjustment Registers

The gradient adjustment registers are used to adjust the gradient of the curve representing the relationship between the grayscale and the grayscale reference voltage level. To adjust the gradient, the resistance values of variable resistors in the middle oh the ladder resistor are adjusted by registers PRP0[2:0]/PRN0[2:0], PRP1[2:0]/PRN1[2:0]. The registers consist of positive and negative polarity registers, allowing asymmetric drive.

2. Amplitude Adjustment Registers

The amplitude adjustment registers, VRP0[3:0]/VRN0[3:0], VRP1[4:0], are used to adjust the amplitude of grayscale voltages. To adjust the amplitude, the resistance values of variable resistors at the top and the bottom of the ladder resister are adjusted.

3. Fine Adjustment Registers

The fine adjustment registers are used to fine-adjust grayscale voltage levels. To fine-adjust grayscale voltage levels, fine adjustment registers adjust the reference voltage level, 8 levels for each register generated from the ladder resistor, in respective 8-to-1 selectors. Same with other registers, the fine adjustment registers consist of positive and negative polarity registers.

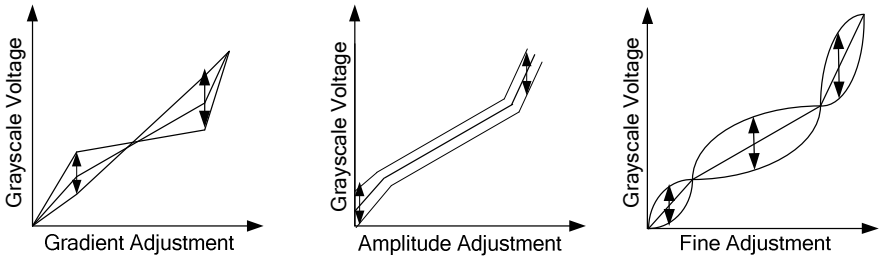

Fig.16.3 Gamma curve adjustment

Register Groups	Positive Polarity	Negative Polarity	Description
Gradient Adjustment	PRP0[2:0]	PRN0[2:0]	Variable Resistor VRCP0,VRCN0
	PRP1[2:0]	PRN1[2:0]	Variable Resistor VRCP1,VRCN1
Amplitude Adjustment	VRP0[3:0]	VRN0[3:0]	Variable Resistor VROP0,VRON0
	VRP1[4:0]	VRN1[4:0]	Variable Resistor VROP1,VRON1
Fine Adjustment	KP0[2:0]	KN0[2:0]	8-to-1 Selector (Voltage Level of Grayscale1)
	KP1[2:0]	KN1[2:0]	8-to-1 Selector (Voltage Level of Grayscale8)
	KP2[2:0]	KN2[2:0]	8-to-1 Selector (Voltage Level of Grayscale20)
	KP3[2:0]	KN3[2:0]	8-to-1 Selector (Voltage Level of Grayscale43)
	KP4[2:0]	KN4[2:0]	8-to-1 Selector (Voltage Level of Grayscale55)
	KP5[2:0]	KN5[2:0]	8-to-1 Selector (Voltage Level of Grayscale62)

Table 16.4: Register Description

Ladder Resistors and 8-to-1 Selector Block Configuration

The reference voltage generation block consists of two ladder resistor units including variable resistors and 8-to-1 selectors. Each 8-10-1 selector selects one of the 8 voltage levels generated from the ladder resistor unit to output as a grayscale reference voltage. Both variable resistors and 8-to-1 selectors are controlled according to theγ-correction registers. This unit has pins to connect a volume resistor externally to compensate differences in various characteristic of panels.

Variable Resistors

ST7781 uses variable resistors of the following three purposes: gradient adjustment (VRCP(N)0/VRCP(N)1);amplitude adjustment (1) (VROP(N)0); and the amplitude adjustment (2) (VROP(N)1). The resistance values of these variable resistors are set by gradient adjustment registers and amplitude adjustment registers as follows.

Gradient Adjustment		Amplitude Adjustment (1)		Amplitude Adjustment (2)	
PRP(N)0/1[2:0] Register	VRCP(N)0 Resistance	VRP(N)0[3:0] Register	VROP(N)0 Resistance	VRP(N)1[4:0] Register	VROP(N)1 Resistance
000	0R	0000	0R	00000	0R
001	4R	0001	2R	00001	1R
010	8R	0010	4R	00010	2R
011	12R	:	:	:	:
100	16R	:	:	:	:
101	20R	1101	26R	11101	29R
110	24R	1111	28R	11110	30R
111	28R	1111	30R	11111	31R

Table 16.5: Resistance Adjustment

8-to-1 selectors

The 8-to-1 selector selects one of eight voltage levels generated from the ladder resistor unit according to the fine adjustment register and output the selected voltage level as a reference grayscale voltage (VgP(N)1~6). The table below shows the setting in the fine adjustment register and the selected voltage levels for respective reference grayscale voltages.

Fine Adjustment Registers and Selected Voltage						
Register	Selected Voltage					
KP(N)[2:0]	VgP(N)1	VgP(N)8	VgP(N)20	VgP(N)43	VgP(N)55	VgP(N)62
000	VP(N)1	VP(N)9	VP(N)17	VP(N)25	VP(N)33	VP(N)41
001	VP(N)2	VP(N)10	VP(N)18	VP(N)26	VP(N)34	VP(N)42
010	VP(N)3	VP(N)11	VP(N)19	VP(N)27	VP(N)35	VP(N)43
011	VP(N)4	VP(N)12	VP(N)20	VP(N)28	VP(N)36	VP(N)44
100	VP(N)5	VP(N)13	VP(N)21	VP(N)29	VP(N)37	VP(N)45
101	VP(N)6	VP(N)14	VP(N)22	VP(N)30	VP(N)38	VP(N)46
110	VP(N)7	VP(N)15	VP(N)23	VP(N)31	VP(N)39	VP(N)47
111	VP(N)8	VP(N)16	VP(N)24	VP(N)32	VP(N)40	VP(N)48

Table 16.7: Fine Adjustment Registers and Selected Voltage

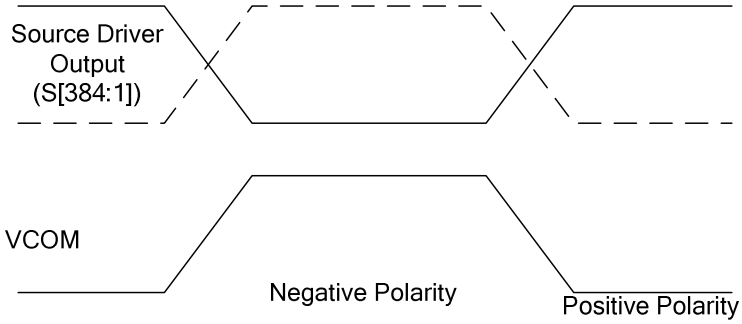

Fig.16.8 Relationship between Source Output and VCOM

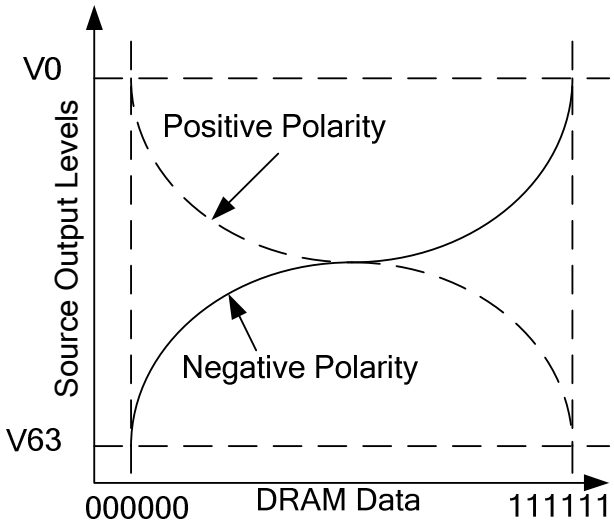

Fig.16.9 Relationship between DRAM Data and Output Level

17. Application

17.1. Configuration of Power Supply Circuit

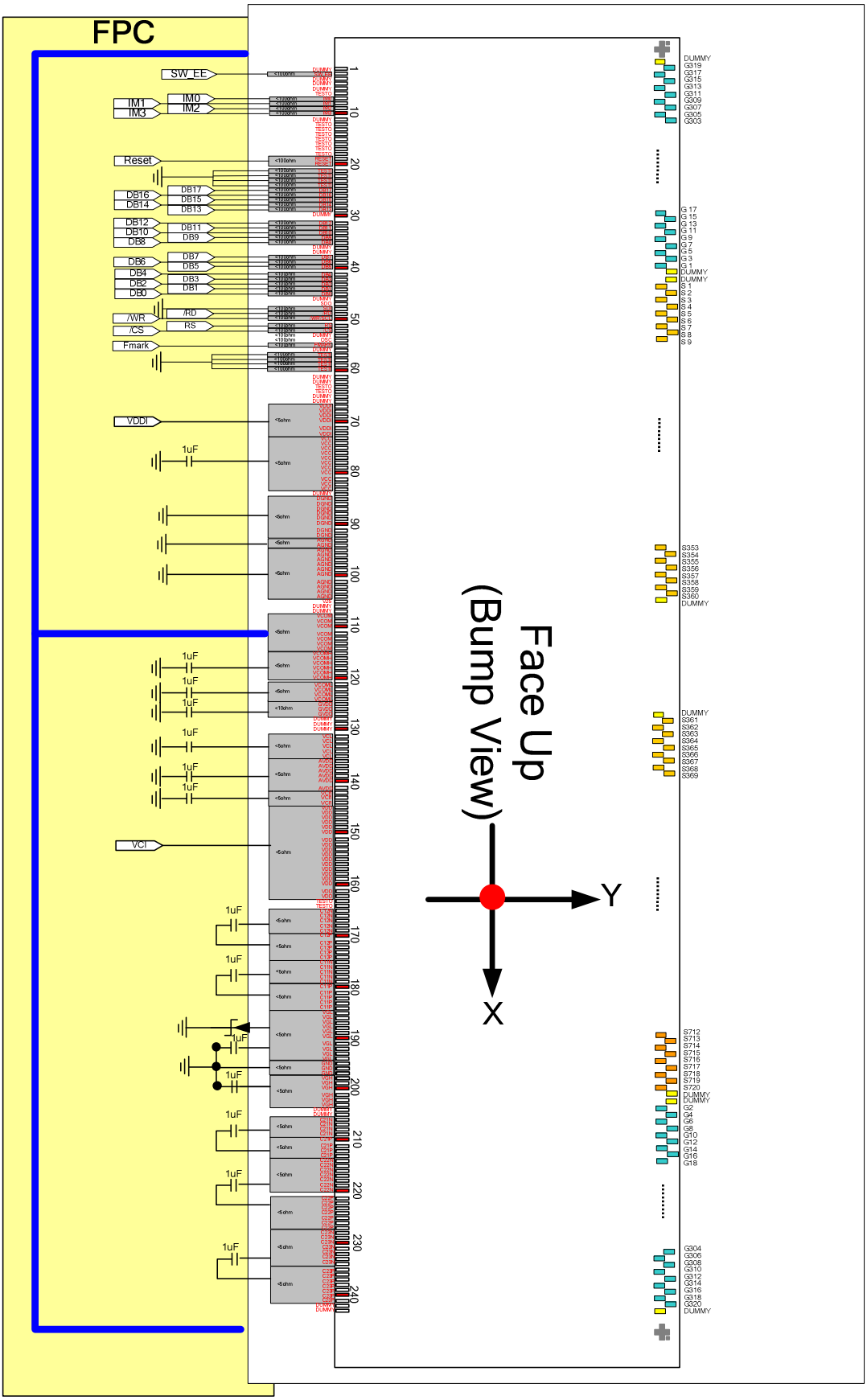

Fig.17.1 Power Supply Circuit Block

The following table shows specifications of external elements connected to the ST7781 power supply circuit.

Items	Recommended Specification	Pin Connection
1 μF Capacity	6.3 V	GVDD, VCI1, VCC, VCL, VCOMH, VCOML, C11P/N, C12P/N, C21P/N, AVDD
	10 V	C22P/N ,C23P/N
	25 V	VGH, VGL
Schottky Diode	VF<0.4V/20mA at 25℃, VR ≥30V	(GND – VGL),

Table 17.1.1: Outside Compoments

17.2. Standby Mode

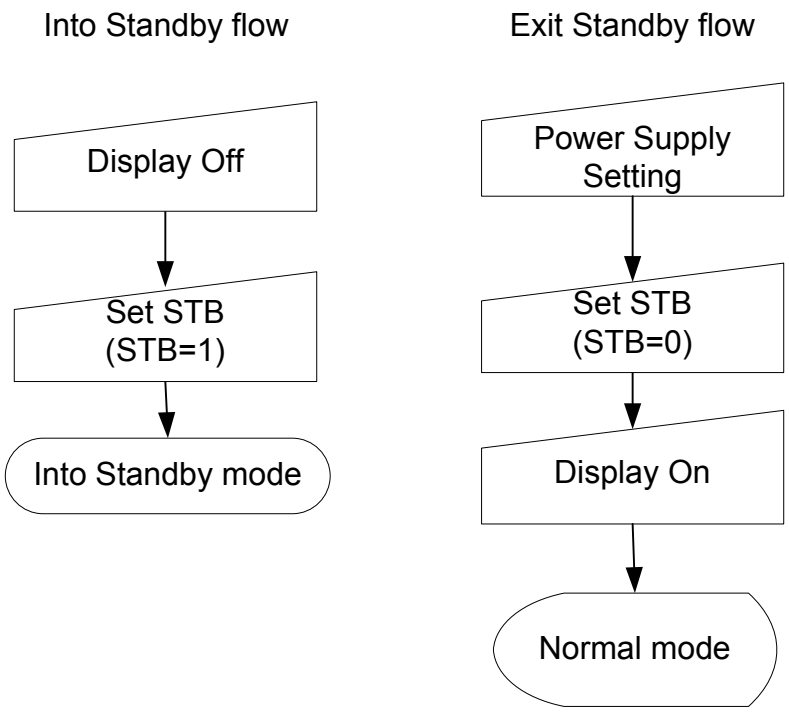

Fig.17.2 Standby Mode Register Setting Sequence

17.3. Power Supply Configuration

When supplying and cutting off power, follow the sequence below. The setting time for oscillators, circuits and operational amplifiers depends on external resistance and capacitance.

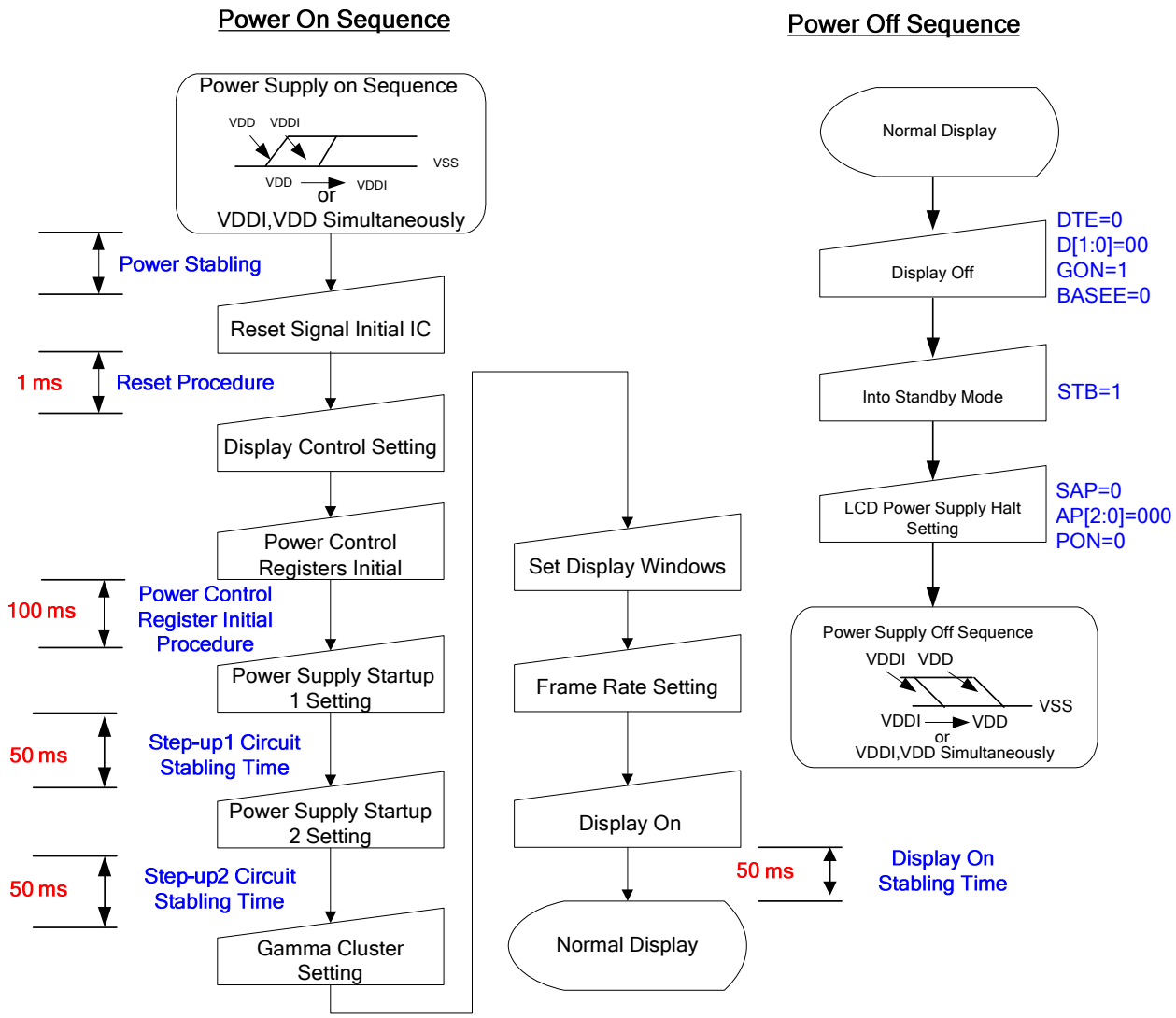

Fig.17.3 Power Supply ON/OFF Sequence

17.4. Voltage Generation

The pattern diagram for setting the voltages and the waveforms of the voltages of the ST7781 are as follows.

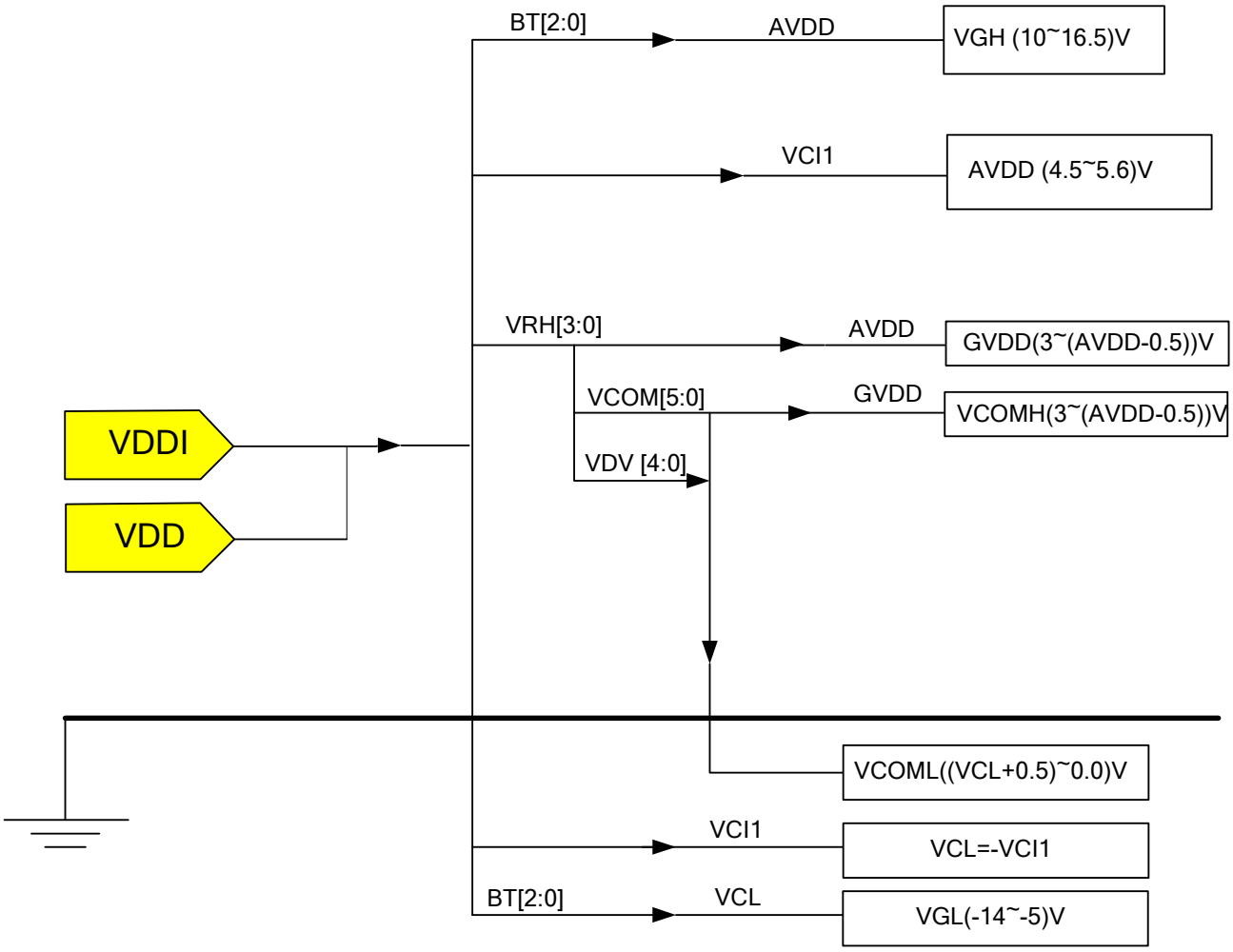

Fig.17.4 Voltage Configuration Diagram

Note1: The AVDD, VGH, VGL, and VCL output voltage levels are lower than their theoretical levels (ideal voltage levels) due to current consumption at respective outputs. The voltage levels in the following relationships (AVDD – GVDD) >0.5V, (VCOML – VCL) > 0.5V, are the actual voltage levels. When the alternating cycles of VCOM are set high (e.g. the polarity inverts every line cycle), current consumption is large. In this case, check the voltage before use.

Note 2: In operation, setting voltages within the respective voltage ranges are recommended.

17.5. Applied Voltage to the TFT panel

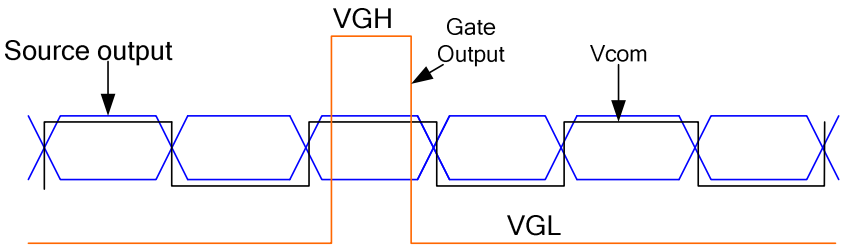

Fig.17.5 Voltage Output to TFT LCD Panel

17.6. Partial Display Function

The ST7781 allows selectively driving two partial images on the screen at arbitrary positions set in the screen drive position registers.The following example shows the setting for partial display function:

Base Image Display Setting	
BASEE	0
NL[5:0]	6'h27
Partial Image 1 Display Setting	
PTDE0	1
PTSA0[8:0]	9'h000
PTEA0[8:0]	9'h00F
PTDP0[8:0]	9'h080
Partial Image 2 Display Setting	
PTDE1	1
PTSA1[8:0]	9'h020
PTEA1[8:0]	9'h02F
PTDP1[8:0]	9'h0C0

Table 17.6.1: Partial Setting Example

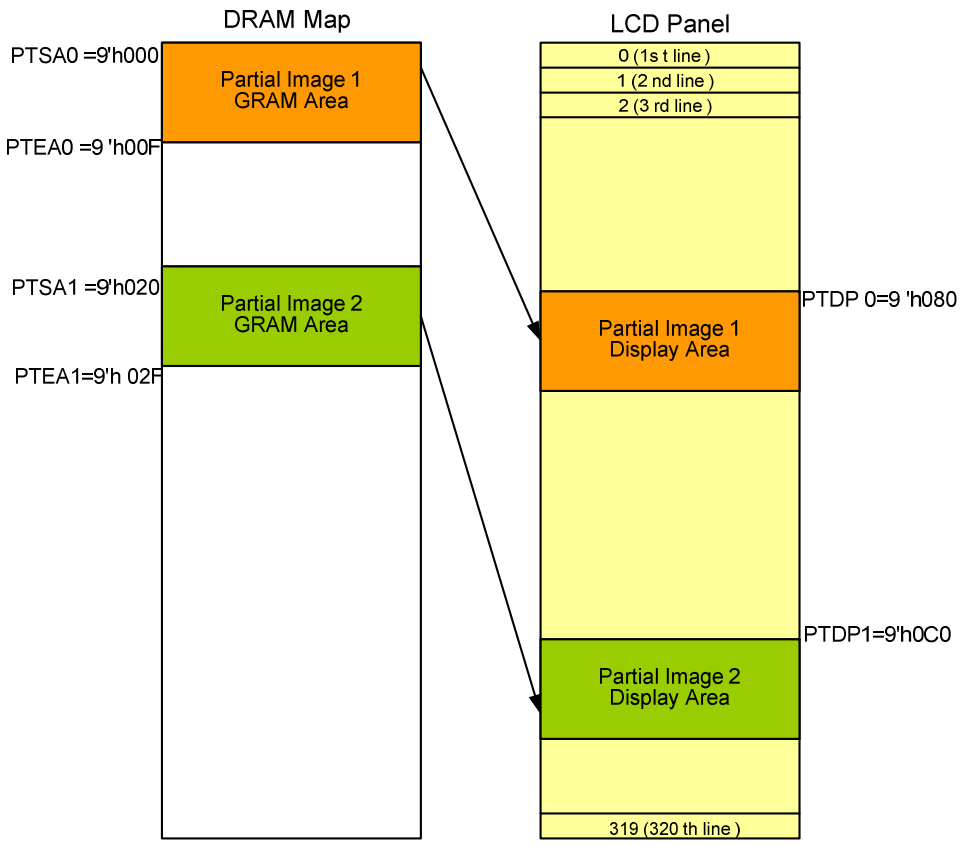

Fig.17.6 Partial Display Example

17.7. Resizing Function

ST7781 supports resizing function (x1/2, x1/4), which is performed when writing image data to DRAM. The resizing function is enabled by setting a window address area and the RSZ bit which represents the resizing factor (x1/2, x1/4) of image. The resizing function allows the system to transfer the original-size image data into the DRAM with resized image data.

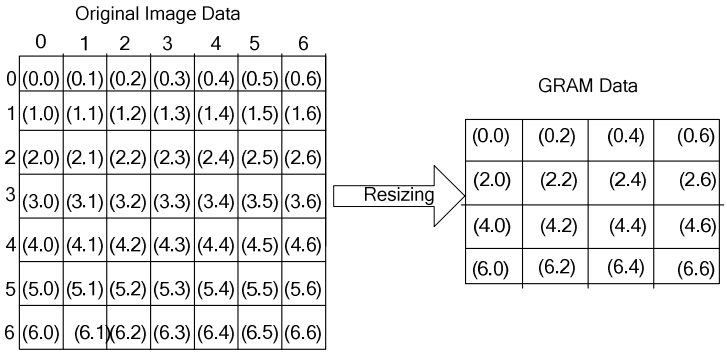

Fig.17.8 Data Transfer in Resizing Mode

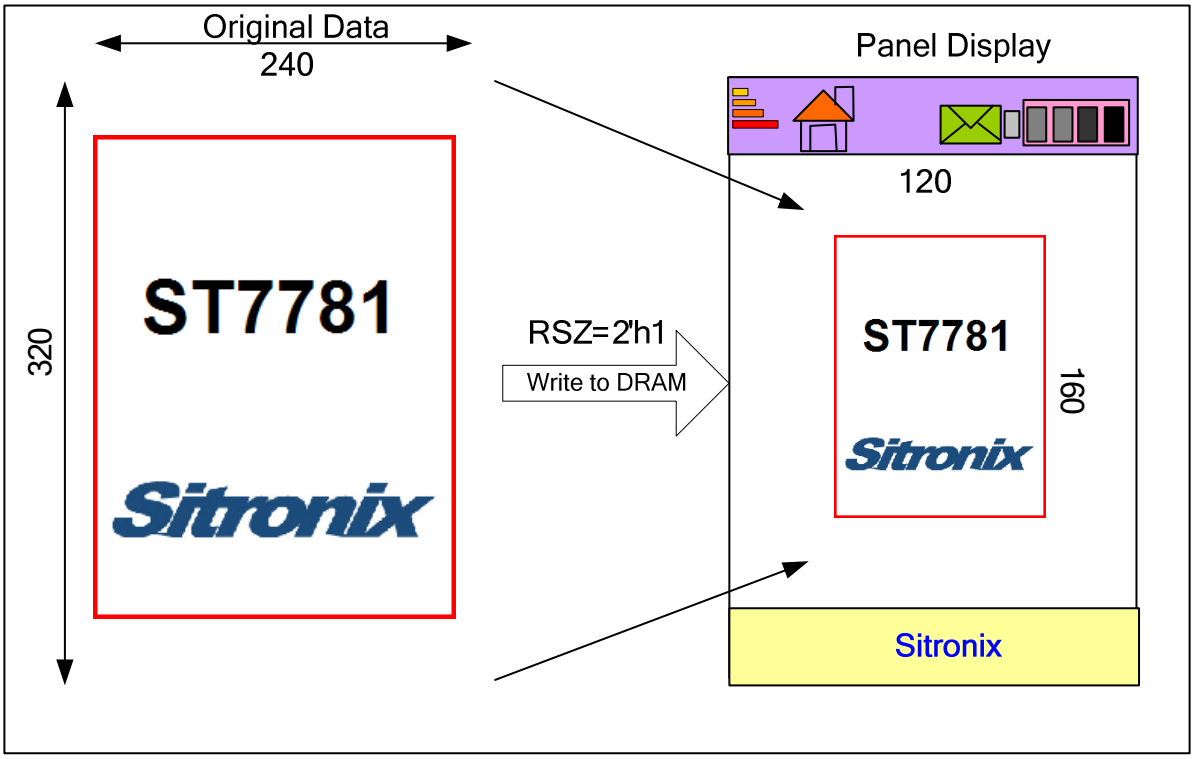

Fig.17.8.1 Resizing Example

Original Image Size (X × Y)	Resized Image Resolution	
	1/2 (RSZ=2'h1)	1/4 (RSZ=2'h3)
640 × 480	320 × 240	160 × 120
352 × 288	176 × 144	88 × 72
320 × 240	60 × 120	80× 60
176 × 144	88 × 72	44× 36
120 × 160	60× 80	30 × 40
132 × 132	66 × 66	33 × 33

Table 17.8.1: Resized Image Resolution

The RSZ bit sets the resizing factor of an image. When setting a window address area in the internal DRAM, the DRAM window address area must fit the size of resized image. The following examples show the resizing setting.

Original image data number in horizontal direction		X
Original image data number in Vertical direction		Y
Resizing Ration		1/N
Resizing Setting	RSZ	N-1
Remainder pixels in horizontal direction	RCH	H
Remainder pixels in vertical direction	RCV	V
DRAM writing start address	AD	(X0, Y0)
DRAM window setting	HAS	X0
	HEA	X0+dX-1
	VSA	Y0
	VEA	Y0+dY-1

Table 17.8.2: Resized Coefficient

18. Revise History

ST7781 Serial Specification Revision History		
Version	**Date**	**Description**
1.0	2009/02/10	Release Version
1.1	2009/03/16	TESTI PIN Name Modify (Page4) Recommended Specification (Page79)
1.2	2009/03/30	Application Flow (Page80)
1.3	2009/04/16	Pad Arrangement (Page2) Pad Center Coordinates(Page4) Add DRAM Address Map Table(Page39) Configuration of Power Supply Circuit(Page79) Recommended Specification (Page80)
1.4	2009/04/29	Modify Power Consumption Table(Page 24)
1.5	2009/04/30	Modfity Pad Center Coordinates (Page2) Modifty Pad Pump Specification (Page3) Configuration of Power Supply Circuit (Page79)
1.7	2009/08/27	Add SPI interface related Description (Page 1,2,4,22,40,41,80)
1.8	2010/01/26	Modifty Logic Input Voltage Range(Vin) and Logic Output Voltage Range(Vout) at Absolute Operation Range Table (Page 24)